LOM JA	APP CRS	Rwy ldg	N/A
344	187°	TDZE	N/A
		Apt Elev	86

NDB-A
HERLONG RECREATIONAL (HEG)

Circling to Rwy 11, 29 NA at night. Rwy 7, 11, 25 helicopter visibility reduction below ¾ SM NA.

MISSED APPROACH: Climb to 1000 then climbing right turn to 3000 direct JA LOM and hold.

AWOS-3	JACKSONVILLE APP CON		GCO	UNICOM
119.275	127.775	377.075	121.725	123.0 (CTAF) L

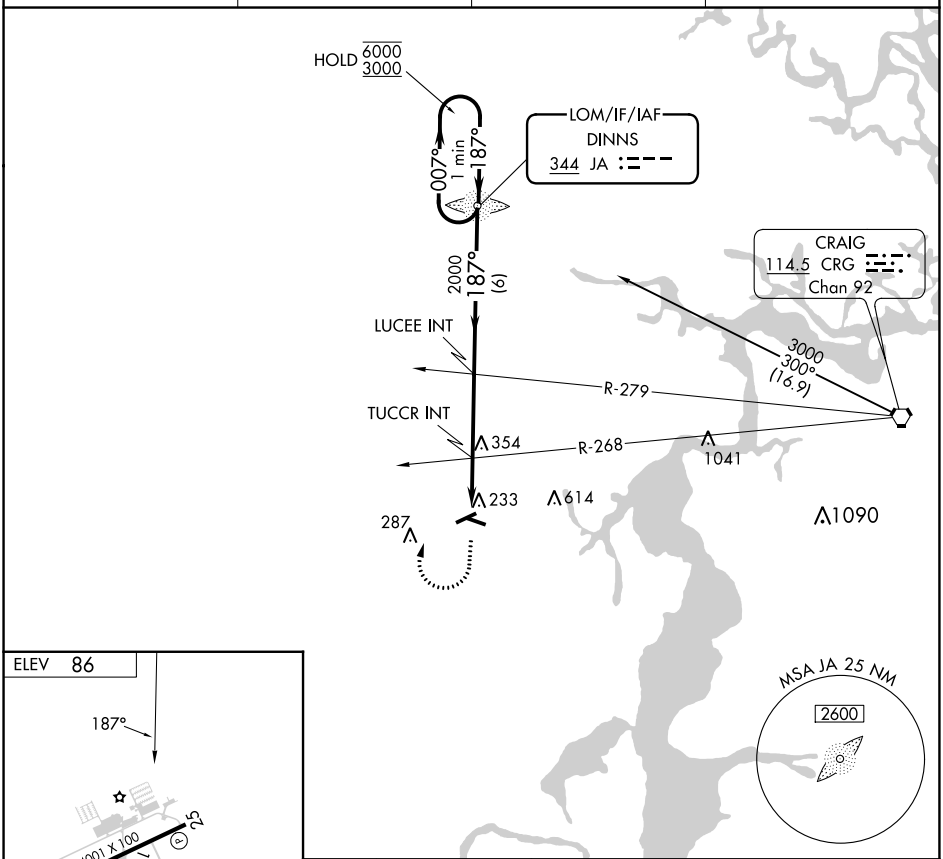

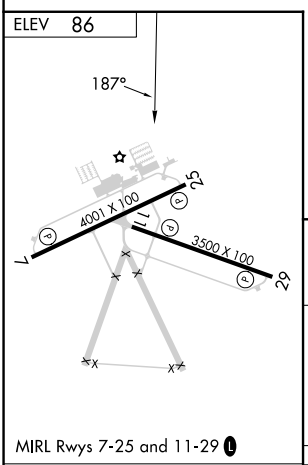

MIRL Rwys 7-25 and 11-29 L

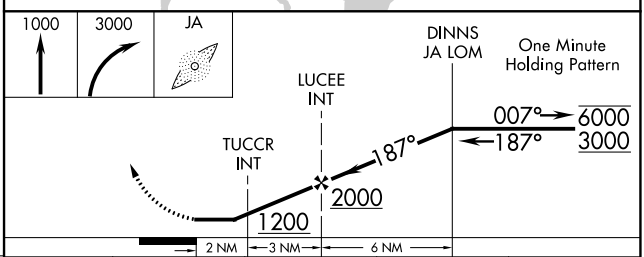

FAF to MAP 5 NM					
Knots	60	90	120	150	180
Min:Sec	5:00	3:20	2:30	2:00	1:40

CATEGORY	A	B	C	D
C CIRCLING	720-1 634 (700-1)		980-2¾ 894 (900-2¾)	980-3 894 (900-3)

SE-3, 22 FEB 2024 to 21 MAR 2024
SE-3, 22 FEB 2024 to 21 MAR 2024

WAAS CH 63026 W25A	APP CRS 251°	Rwy ldg 4001 TDZE 86 Apt Elev 86

RNAV (GPS) RWY 25
HERLONG RECREATIONAL (HEG)

Baro-VNAV NA when using Cecil altimeter setting. For uncompensated Baro-VNAV systems, procedure NA below -15°C (5°F) or above 54°C (130°F). DME/DME RNP-0.3 NA. When local altimeter setting not received, use Cecil altimeter setting: increase all DA 13 feet and all MDA 20 feet; increase LNAV Cat C and D visibility ⅛ mile. Procedure NA at night for Cat C/D aircraft. Night landing: Rwy 7, 11, 29 NA. Helicopter visibility reduction below ¾ SM NA.

NA

MISSED APPROACH: Climb to 2000 direct WODKU and on track 304° to REDIE and hold.

AWOS-3	JACKSONVILLE APP CON	GCO	UNICOM
119.275	127.775 377.075	121.725	123.0 (CTAF) L

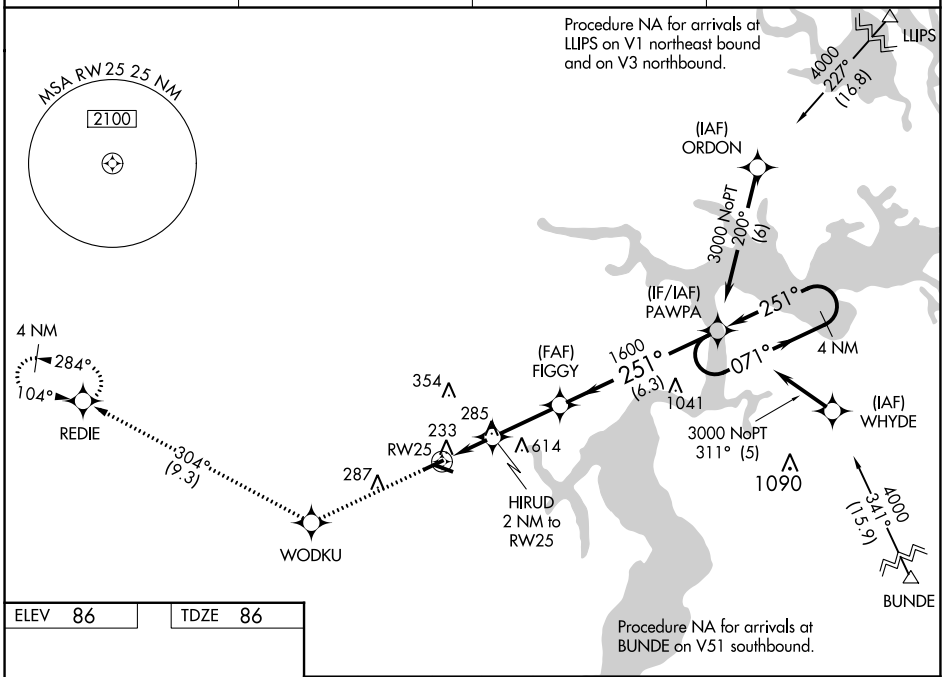

ELEV 86	TDZE 86

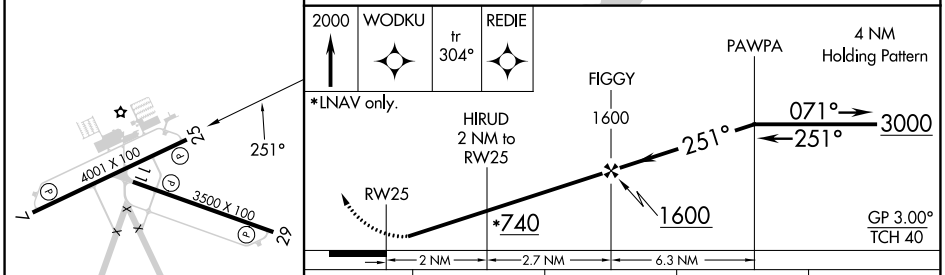

CATEGORY	A	B	C	D
LPV DA	378-1 292 (300-1)			
LNAV/VNAV DA	612-1⅞ 526 (600-1⅞)			
LNAV MDA	600-1 514 (600-1)		600-1⅜ 514 (600-1⅜)	
C CIRCLING	600-1 514 (600-1)		980-2¾ 894 (900-2¾)	980-3 894 (900-3)

MIRL Rwys 7-25 and 11-29 L

SE-3, 22 FEB 2024 to 21 MAR 2024

INSTRUMENT APPROACH PROCEDURE CHARTS

IFR ALTERNATE AIRPORT MINIMUMS

Pilots must review the IFR Alternate Minimums Notes to determine alternate airport suitability. ▲NA designation on the approach chart means that pilots may not use that approach as an alternate due to unmonitored facility, absence of weather reporting service, or lack of adequate navigation coverage. Approaches with the ▲NA designation are not listed in this section. ▲ designation on the approach chart indicates that the approach procedure has non-standard minimums (for aircraft other than helicopters) or restrictions (for all users) for its use as an alternate.

Alternate Minima (ref: 14 CFR 91.169)

	Precision Approach	Non-Precision Approach
Standard	**600-2**	**800-2**
▲Non-Standard or restrictions	As indicated below	As indicated below
Helicopters	For the selected approach: Ceiling: 200' above published ceiling Visibility: the greater of 1 SM visibility or the published visibility	
US Military (USA/USN/USAF)	See Service Regulations	

Note: For alternate airport flight planning purposes, precision approach operations include: ILS, PAR, and GLS, and Non-Precision approach operations include: NDB, VOR, LOC, TACAN, LDA, SDF, ASR, RNAV (GPS) and RNAV (RNP).

NAME — ALTERNATE MINIMUMS

APALACHICOLA, FL
APALACHICOLA RGNL-CLEVE RANDOLPH FLD (AAF)……..…**RNAV (GPS) Rwy 6**
RNAV (GPS) Rwy 14
RNAV (GPS) Rwy 24
RNAV (GPS) Rwy 32
NA when local weather not available.

BARTOW, FL
BARTOW EXEC (BOW)……...**RNAV (GPS) Rwy 5**
RNAV (GPS) Rwy 9L
RNAV (GPS) Rwy 23
RNAV (GPS) Rwy 27R
VOR Rwy 9L[1]
NA when local weather not available.
[1]Category D, 800-2¼.

BOCA RATON, FL
BOCA RATON (BCT)…....……**RNAV (GPS) Rwy 5**
RNAV (GPS) Y Rwy 23[1]
NA when local weather not available.
[1]Category D, 900-2¾.

BONIFAY, FL
TRI-COUNTY (BCR)……**RNAV (GPS) Rwy 1**
RNAV (GPS) Rwy 19
NA when local weather not available.

NAME — ALTERNATE MINIMUMS

BROOKSVILLE, FL
BROOKSVILLE-TAMPA BAY RGNL (BKV)……**RNAV (GPS) Rwy 3**
RNAV (GPS) Rwy 9
RNAV (GPS) Rwy 21
RNAV (GPS) Rwy 27
NA when local weather not available.

CHARLOTTE AMALIE, VI
CYRIL E KING (STT) (TIST)….**ILS or LOC Rwy 10**[1]
RNAV (GPS) Rwy 10[2]
VOR-A[3]
[1]LOC, Category C, 900-2½; Category D, 1500-3.
[2]Categories A, B, 1600-2½; Categories C, D, 1600-3.
[3]Categories A, B, C, 1200-3; Category D, 1500-3.

CHRISTIANSTED, ST. CROIX, VI
HENRY E ROHLSEN (STX) (TISX)….…**ILS or LOC Rwy 10**[12]
RNAV (GPS) Rwy 10[3]
VOR Rwy 28[45]
[1]ILS, NA when control tower closed.
[2]LOC, NA.
[3]Category A, B, 1000-2; Category C, D, 1000-3.
[4]NA when control tower closed.
[5]Category A, B, 900-2; Category C, D, 900-3.

NAME ALTERNATE MINIMUMS

CLEWISTON, FL
AIRGLADES (2IS)……**RNAV (GPS) Rwy 13**
RNAV (GPS) Rwy 31
NA when local weather not available.

CRESTVIEW, FL
BOB SIKES (CEW)……**RNAV (GPS) Rwy 17**
RNAV (GPS) Rwy 35
VOR-A[1]
NA when local weather not available.
[1]Category D, 800-2¼.

CRYSTAL RIVER, FL
CRYSTAL RIVER-CAPT TOM DAVIS
FLD (CGC)……**RNAV (GPS) Rwy 9**
RNAV (GPS) Rwy 27
NA when local weather not available.
Category C, 800-2¼; Category D, 900-2¾.

DAYTONA BEACH, FL
DAYTONA BEACH
INTL (DAB)……**ILS or LOC Rwy 7L**[1]
ILS or LOC Rwy 25R[2]
NA when control tower closed.
[1]ILS, Categories A, B, C, D, 700-2.
[2]ILS, LOC, Categories A, B, 1100-2;
Category C, D, 1100-3.

DEFUNIAK SPRINGS, FL
DEFUNIAK
SPRINGS (54J)……**RNAV (GPS) Rwy 9**
RNAV (GPS) Rwy 27
NA when local weather not available.

DELAND, FL
DELAND MUNI-SIDNEY H
TAYLOR FLD (DED)……**RNAV (GPS) Rwy 5**
RNAV (GPS) Rwy 12
RNAV (GPS) Rwy 23
RNAV (GPS) Rwy 30
NA when local weather not available.

DESTIN, FL
DESTIN EXEC (DTS)……**RNAV (GPS) Rwy 14**
RNAV (GPS) Rwy 32
NA when local weather not available.

FERNANDINA BEACH, FL
FERNANDINA BEACH
MUNI (FHB)……**RNAV (GPS) Rwy 4**
RNAV (GPS) Rwy 13
RNAV (GPS) Rwy 22
NA when local weather not available.

NAME ALTERNATE MINIMUMS

FORT LAUDERDALE, FL
FORT LAUDERDALE
EXEC (FXE)……**ILS or LOC Rwy 9**[1]
RNAV (GPS) Rwy 9[2]
RNAV (GPS) Rwy 27[2]
NA when local weather not available.
[1]ILS, Category B, 700-2; Category C, 800-2¼;
Category D, 800-2½; LOC, Category C,
800-2 ¼; Category D, 800-2 ½.
[2]Category C, 800-2¼; Category D, 800-2½.

FORT LAUDERDALE/HOLLYWOOD
INTL (FLL)……**ILS or LOC Rwy 10L**[1]
ILS or LOC Rwy 10R[1]
ILS or LOC Rwy 28L[1]
ILS or LOC Rwy 28R[1]
RNAV (GPS) Rwy 10R[2]
RNAV (GPS) Rwy 28L[2]
RNAV (GPS) Z Rwy 10L[2]
RNAV (GPS) Y Rwy 28R[2]
[1]LOC, Category C, 800-2¼.
[2]Category D, 800-2¼.

FORT MYERS, FL
PAGE FLD (FMY)……**ILS or LOC Rwy 5**
NA when control tower closed.

SOUTHWEST
FLORIDA INTL (RSW)……**ILS or LOC/DME Rwy 6**
NA when control tower closed.
LOC, Category E, 800-2¾.

FORT PIERCE, FL
TREASURE COAST
INTL (FPR)……**ILS or LOC Rwy 10R**[12]
RNAV (GPS) Rwy 10R[34]
RNAV (GPS) Rwy 14[34]
RNAV (GPS) Rwy 28L[34]
RNAV (GPS) Rwy 32[34]
VOR/DME Rwy 14[34]
[1]LOC, NA when local weather not available.
[2]LOC, Category C, 900-2½; Category D, 900-2¾.
[3]NA when local weather not available.
[4]Category C, 900-2½; Category D, 900-2¾.

GAINESVILLE, FL
GAINESVILLE
RGNL (GNV)……**ILS or LOC Rwy 29**
RNAV (GPS) Rwy 7
RNAV (GPS) Rwy 11
RNAV (GPS) Rwy 25
RNAV (GPS) Rwy 29
NA when local weather not available.

IMMOKALEE, FL
IMMOKALEE RGNL (IMM)……**RNAV (GPS) Rwy 18**
RNAV (GPS) Rwy 36
NA when local weather not available.

22 FEB 2024 to 21 MAR 2024
22 FEB 2024 to 21 MAR 2024

NAME ALTERNATE MINIMUMS

INVERNESS, FL
INVERNESS (INF)……**RNAV (GPS) Rwy 1**
RNAV (GPS) Rwy 19
NA when local weather not available.

JACKSONVILLE, FL
CECIL (VQQ)……**ILS or LOC Rwy 36R[1,2]**
RNAV (GPS) Rwy 9R
RNAV (GPS) Rwy 18L
RNAV (GPS) Rwy 27L
RNAV (GPS) Rwy 36R
TACAN Rwy 27L[3]
VOR Rwy 27L
NA when local weather not available.
[1]NA when control tower closed.
[2]LOC, Category E, 900-3.
[3]Category E, 900-3.

HERLONG RECREATIONAL (HEG)……**NDB-A**
NA when local weather not available.
Category C, 900-2¾, Category D, 900-3.

JACKSONVILLE EXEC AT
CRAIG (CRG)……**ILS or LOC Rwy 32[1,2]**
RNAV (GPS) Rwy 14[3]
RNAV (GPS) Rwy 32[3]
VOR Rwy 14[4]
NA when local weather not available.
[1]NA when control tower closed.
[2]LOC, Category D, 800-2½.
[3]Category D, 800-2½.
[4]Categories C, D, 800-2½.

JACKSONVILLE
INTL (JAX)……**ILS Y or LOC Y Rwy 8[1]**
VOR/DME Rwy 32[2]
[1]LOC, Category E, 800-2½.
[2]Category E, 800-2½.

KEY WEST, FL
KEY WEST INTL (EYW)……**RADAR-1[1]**
RNAV (GPS) Rwy 9[2]
RNAV (GPS) Rwy 27[2]
[1]NA when GCA closed.
[2]NA when local weather not available.

LAKE CITY, FL
LAKE CITY
GATEWAY (LCQ)……**RNAV (GPS) Rwy 10**
RNAV (GPS) Rwy 28
NA when local weather not available.
Category D, 800-2½.

LAKELAND, FL
LAKELAND LINDER
INTL (LAL)……**ILS or LOC Rwy 10[1]**
RNAV (GPS) Rwy 5[2]
RNAV (GPS) Rwy 10[2]
RNAV (GPS) Rwy 23[2]
RNAV (GPS) Rwy 28[2]
VOR Rwy 10[2]
VOR Rwy 28[3]
NA when local weather not available.
[1]LOC, Category D, 800-2¼.
[2]Category D, 800-2¼.
[3]Categories C, D, 800-2½.

LAKE WALES, FL
LAKE WALES
MUNI (X07)……**RNAV (GPS) Rwy 6**
RNAV (GPS) Rwy 24
NA when local weather not available.
Category D, 900-2¾.

LEESBURG, FL
LEESBURG INTL (LEE)……**RNAV (GPS) Rwy 4**
RNAV (GPS) Rwy 13
RNAV (GPS) Rwy 31
NA when local weather not available.
Category D, 800-2¼.

LIVE OAK, FL
SUWANNEE
COUNTY (24J)……**RNAV (GPS) Rwy 25**
NA when local weather not available.

MARATHON, FL
THE FLORIDA KEYS
MARATHON INTL (MTH)……**NDB-A**
RNAV (GPS) Rwy 7
RNAV (GPS) Rwy 25
NA when local weather not available.

MARCO ISLAND, FL
MARCO ISLAND
EXEC (MKY)……**RNAV (GPS) Rwy 17**
RNAV (GPS) Rwy 35
NA when local weather not available.
Category D, 900-2¾.

MARIANNA, FL
MARIANNA MUNI (MAI)……**RNAV (GPS) Rwy 18**
VOR-A
Category D, 800-2½.

MAYAGUEZ, PR
EUGENIO MARIA
DE HOSTOS (MAZ) (TJMZ)….**RNAV (GPS) Rwy 9**
VOR Rwy 9
NA when local weather not available.
Categories A, B, 1100-2; Category C, 1500-3.

22 FEB 2024 to 21 MAR 2024
22 FEB 2024 to 21 MAR 2024

NAME ALTERNATE MINIMUMS

MELBOURNE, FL

MELBOURNE ORLANDO INTL (MLB)……..... **ILS or LOC Rwy 9R[12]**
LOC BC Rwy 27L[13]
RNAV (GPS) Rwy 9L[3]
RNAV (GPS) Rwy 9R[3]
RNAV (GPS) Rwy 27L[3]
RNAV (GPS) Rwy 27R[3]
VOR Rwy 9R[3]
VOR Rwy 27L[3]

[1]NA when control tower closed.
[2]LOC, Category D, 900-2¾.
[3]Category D, 900-2¾.

MIAMI, FL

MIAMI EXEC (TMB)……..... **ILS or LOC Rwy 9R[1]**
RNAV (GPS) Rwy 9L
RNAV (GPS) Rwy 9R
RNAV (GPS) Rwy 27L
RNAV (GPS) Rwy 27R

NA when local weather not available.
[1]NA when control tower closed.

MIAMI INTL (MIA)…… **ILS or LOC Rwy 27**
LOC, Categories A, B, 1300-2;
Categories C, D, 1300-3.

MIAMI-OPA LOCKA EXEC (OPF)……..... **ILS or LOC Rwy 9L[12]**
ILS or LOC Rwy 12[12]
ILS or LOC Rwy 27R[12]
RNAV (GPS) Rwy 9L[3]
RNAV (GPS) Rwy 12[3]
RNAV (GPS) Rwy 27R[3]
RNAV (GPS) Rwy 30[3]

NA when local weather not available.
[1]NA when control tower closed.
[2]LOC, Category D, 800-2¼.
[3]Category D, 800-2¼.

NAPLES, FL

NAPLES MUNI (APF)……. **RNAV (GPS)-A**
RNAV (GPS)-B
RNAV (GPS) Rwy 5
RNAV (GPS) Rwy 23
VOR Rwy 5
VOR Rwy 23

NA when local weather not available.
Category D, 900-2¾.

NEW SMYRNA BEACH, FL

NEW SMYRNA BEACH MUNI (EVB)……..... **RNAV (GPS) Rwy 2[1]**
RNAV (GPS) Rwy 7
RNAV (GPS) Rwy 25
RNAV (GPS) Rwy 29

NA when local weather not available.
[1]Category D, 800-2¼.

OCALA, FL

OCALA INTL-JIM TAYLOR FLD (OCF)…… **ILS or LOC Rwy 36[1]**
RNAV (GPS) Rwy 18[2]
RNAV (GPS) Rwy 36[2]
VOR Rwy 36[2]

NA when local weather not available.
[1]LOC, Category D, 900-2¾.
[2]Category D, 900-2¾.

OKEECHOBEE, FL

OKEECHOBEE COUNTY (OBE)…… **RNAV (GPS) Rwy 5**
RNAV (GPS) Rwy 14
RNAV (GPS) Rwy 23
RNAV (GPS) Rwy 32

NA when local weather not available.

ORLANDO, FL

EXEC (ORL)……..... **ILS or LOC Rwy 7[12]**
ILS or LOC Rwy 25[14]
RNAV (GPS) Rwy 7[3]
RNAV (GPS) Rwy 25[3]

[1]NA when control tower closed.
[2]ILS, LOC, Category C, 800-2¼; Category D, 800-2½.
[3]Category C, 800-2¼; Category D, 800-2½.
[4]LOC, Category C, 800-2¼; Category D, 800-2½.

KISSIMMEE GATEWAY (ISM)…… **ILS or LOC Rwy 15**
RNAV (GPS) Rwy 6
RNAV (GPS) Rwy 15
RNAV (GPS) Rwy 33

NA when local weather not available.

ORLANDO SANFORD INTL (SFB)…… **ILS or LOC Rwy 9L[12]**
ILS or LOC Rwy 9R[12]
ILS or LOC Rwy 27R[2]
RNAV (GPS) Rwy 9L[1]
RNAV (GPS) Rwy 9R[1]
RNAV (GPS) Rwy 18[1]
RNAV (GPS) Rwy 27L[1]

[1]NA when local weather not available.
[2]NA when control tower closed.

ORMOND BEACH, FL

ORMOND BEACH MUNI (OMN)…… **RNAV (GPS) Rwy 9**
RNAV (GPS) Rwy 17
RNAV (GPS) Rwy 27

NA when local weather not available.

PALATKA, FL

PALATKA MUNI - LT KAY LARKIN FLD (28J)…… **RNAV (GPS) Rwy 9**
NA when local weather not available.

22 FEB 2024 to 21 MAR 2024

22 FEB 2024 to 21 MAR 2024

NAME ALTERNATE MINIMUMS

PALM COAST, FL
FLAGLER EXEC (FIN)……..…**RNAV (GPS) Rwy 6[1]**
RNAV (GPS) Rwy 11
RNAV (GPS) Rwy 24
RNAV (GPS) Rwy 29
Category D, 800-2¼.
[1]NA when local weather not available.

PANAMA CITY, FL
NORTHWEST FLORIDA BEACHES
INTL (ECP)……..….....…**ILS or LOC Rwy 16**
RNAV (GPS) Rwy 16
RNAV (GPS) Rwy 34
NA when local weather not available.
NA when control tower closed.

PENSACOLA, FL
PENSACOLA
INTL (PNS)……**ILS or LOC Rwy 17[1]**
LOC Rwy 26[23]
RNAV (GPS) Rwy 8[3]
RNAV (GPS) Rwy 17[3]
RNAV (GPS) Rwy 26[3]
RNAV (GPS) Rwy 35[3]
VOR Rwy 8[3]
[1]LOC, NA when control tower closed; Category D, 800-2¼.
[2]NA when control tower closed.
[3]Category D, 800-2¼.

PERRY, FL
PERRY-FOLEY (FPY)....……**RNAV (GPS) Rwy 18[1]**
RNAV (GPS) Rwy 36[2]
NA when local weather not available.
[1]Categories A, B, C, 1000-3; Category D, 900-2¾.
[2]Category C, 900-2½; Category D, 900-2¾.

PLANT CITY, FL
PLANT CITY (PCM)…....……**RNAV (GPS) Rwy 10**
RNAV (GPS) Rwy 28
NA when local weather not available.

POMPANO BEACH, FL
POMPANO BEACH
AIRPARK (PMP)……**LOC Rwy 15[1]**
RNAV (GPS) Rwy 6
RNAV (GPS) Rwy 15
RNAV (GPS) Rwy 24
RNAV (GPS) Rwy 33
NA when local weather not available.
[1]NA when control tower closed.

PUNTA GORDA, FL
PUNTA GORDA (PGD)……....**ILS or LOC Rwy 4[12]**
RNAV (GPS) Rwy 4[3]
RNAV (GPS) Rwy 15[3]
RNAV (GPS) Rwy 22[3]
RNAV (GPS) Rwy 33[3]
VOR Rwy 4[3]
VOR Rwy 22[3]
NA when local weather not available.
[1]NA when control tower closed.
[2]ILS, LOC, Category D, 800-2¼.
[3]Category D, 800-2¼.

QUINCY, FL
QUINCY MUNI (2J9)……...……**RNAV (GPS)-A**
NA when local weather not available.

ST. AUGUSTINE, FL
NORTHEAST FLORIDA
RGNL (SGJ)……..…**ILS or LOC Rwy 31[12]**
RNAV (GPS) Rwy 13[3]
RNAV (GPS) Rwy 31[3]
NA when local weather not available.
[1]NA when control tower closed.
[2]LOC, Category D, 800-2½.
[3]Category D, 800-2½.

ST. PETERSBURG, FL
ALBERT
WHITTED (SPG)……..……**RNAV (GPS) Rwy 7[1]**
RNAV (GPS) Rwy 18
RNAV (GPS) Rwy 36
VOR Rwy 18
NA when local weather not available.
[1]Category C, 800-2½.

ST. PETERSBURG-CLEARWATER, FL
ST. PETE-CLEARWATER
INTL (PIE)……**ILS or LOC Rwy 18[1]**
ILS or LOC Rwy 36[23]
RNAV (GPS) Rwy 18[4]
RNAV (GPS) Rwy 36[4]
VOR Rwy 4[45]
[1]LOC, Category E, 1000-3.
[2]NA when control tower closed.
[3]ILS, Categories A, B, C, D, 700-2; Category E, 1000-3; LOC, Category E, 1000-3.
[4]NA when local weather not available.
[5]Categories A, B, 1000-2; Category C, D, 1000-3.

22 FEB 2024 to 21 MAR 2024
22 FEB 2024 to 21 MAR 2024

NAME ALTERNATE MINIMUMS

SAN JUAN, PR

LUIS MUNOZ MARIN INTL (SJU) (TJSJ)……**ILS or LOC Rwy 8**[12]
ILS or LOC Rwy 10[23]
NDB Rwy 8[24]
RNAV (GPS) Rwy 8[4]
RNAV (GPS) Rwy 10[4]
RNAV (GPS) Rwy 26[4]
RNAV (GPS) Rwy 28[4]
VOR or TACAN Rwy 8[25]
VOR or TACAN Rwy 10[25]
VOR or TACAN Rwy 26[25]

[1]ILS, LOC, Category D, 1000-3.
[2]NA when local weather not available.
[3]ILS, LOC, Category D, E, 1000-3.
[4]Category D, 1000-3.
[5]Category D, E, 1000-3.

SARASOTA/BRADENTON, FL

SARASOTA/BRADENTON INTL (SRQ)……**ILS or LOC Rwy 14**
ILS or LOC Rwy 32

NA when control tower closed.

SEBRING, FL

SEBRING RGNL (SEF)……**RNAV (GPS) RWY 14**[1]
RNAV (GPS) RWY 32

Category D, 900-2¾.
[1]NA when local weather not available.

STUART, FL

WITHAM FLD (SUA)……**RNAV (GPS) Rwy 30**

NA when local weather not available.

TALLAHASSEE, FL

TALLAHASSEE INTL (TLH)……**ILS or LOC Rwy 27**[12]
ILS or LOC Rwy 36[13]
RADAR-1[4]
RNAV (GPS) Rwy 9[4]
RNAV (GPS) Rwy 18[4]
RNAV (GPS) Rwy 27[4]
RNAV (GPS) Rwy 36[4]
VOR/DME or TACAN Rwy 36[5]
VOR Rwy 18[46]

[1]NA when control tower closed.
[2]ILS, Categories A, B, C 800-2; Category D, 800-2¼; Category E, 1000-3; LOC, Category D, 800-2¼; Category E, 1000-3.
[3]ILS, Category D, 700-2¼; LOC, Category D, 800-2¼.
[4]Category D, 800-2¼.
[5]Category D, 800-2¼; Category E, 1000-3.
[6]NA when local weather not available.

NAME ALTERNATE MINIMUMS

TAMPA, FL

PETER O KNIGHT (TPF)……**RNAV (GPS) Rwy 22**
RNAV (GPS) Rwy 36

NA when local weather not available.

TAMPA EXEC (VDF)……**ILS or LOC Rwy 23**[1]
RNAV (GPS) Rwy 5[2]
RNAV (GPS) Rwy 18
RNAV (GPS) Rwy 23[2]

NA when local weather not available.
[1]LOC, Category C, 800-2¼.
[2]Category C, 800-2¼.

TAMPA INTL (TPA)……**ILS or LOC Rwy 1L**[1]
ILS or LOC Rwy 19L[23]
ILS or LOC Rwy 19R[1]
LOC Rwy 1R[4]
RNAV (GPS) Rwy 1L[5]
RNAV (GPS) Rwy 1R[5]
RNAV (GPS) Rwy 10[4]
RNAV (GPS) Rwy 19R[5]
RNAV (GPS) Rwy 28[4]
RNAV (GPS) Z Rwy 19L[4]

[1]ILS, Category C, 700-2; Categories D, E, 1000-3; LOC Categories D, E, 1000-3.
[2]LOC, Category D, 1000-3.
[3]NA when local weather not available.
[4]Category D, 1000-3.
[5]Categories D, E, 1000-3.

TITUSVILLE, FL

SPACE FLORIDA LAUNCH AND LANDING FACILITY (TTS)……**RNAV (GPS) Rwy 15**[1]
RNAV (GPS) Rwy 33[23]

[1]Category C, 1000-2¾, Category D, E, 1000-3.
[2]NA when local weather not available.
[3]Categories C, D, E, 1100-3.

SPACE COAST RGNL (TIX)……**ILS or LOC Rwy 36**[2]
RNAV (GPS) Rwy 9[1]
RNAV (GPS) Y Rwy 18[1]
RNAV (GPS) Z Rwy 18[2]
RNAV (GPS) Rwy 36[1]

[1]NA when local weather not available.
[2]NA when control tower closed.

VENICE, FL

VENICE MUNI (VNC)……**RNAV (GPS) Rwy 5**
RNAV (GPS) Rwy 13
RNAV (GPS) Rwy 23
RNAV (GPS) Rwy 31

NA when local weather not available.
Category D, 1000-3.

22 FEB 2024 to 21 MAR 2024
22 FEB 2024 to 21 MAR 2024

NAME	ALTERNATE MINIMUMS	NAME	ALTERNATE MINIMUMS

VERO BEACH, FL

VERO BEACH
RGNL (VRB)……**RNAV (GPS) Rwy 4**
RNAV (GPS) Rwy 12R
RNAV (GPS) Rwy 22
RNAV (GPS) Rwy 30L
VOR Rwy 12R
VOR Rwy 30L

NA when local weather not available.
Category D, 800-2½.

WEST PALM BEACH, FL

PALM BEACH
INTL (PBI)……**ILS or LOC Rwy 10L[1]**
ILS or LOC Rwy 28R[1]
RNAV (GPS) Y Rwy 10L[2]
RNAV (GPS) Y Rwy 14[2]
RNAV (GPS) Y Rwy 28R[2]
RNAV (GPS) Y Rwy 32[2]

[1]LOC, Category D, 800-2½.
[2]Category D, 800-2½.

WINTER HAVEN, FL

WINTER HAVEN
RGNL (GIF)……**RNAV (GPS) Rwy 5**
RNAV (GPS) Rwy 11
VOR-A

NA when local weather not available.
Category D, 900-2¾.

ZEPHYRHILLS, FL

ZEPHYRHILLS
MUNI (ZPH)……**RNAV (GPS) Rwy 1**
RNAV (GPS) Rwy 5
RNAV (GPS) Rwy 19
RNAV (GPS) Rwy 23

NA when local weather not available.

22 FEB 2024 to 21 MAR 2024
22 FEB 2024 to 21 MAR 2024

IFR TAKEOFF MINIMUMS AND (OBSTACLE) DEPARTURE PROCEDURES

Civil Airports and Selected Military Airports

ALL USERS: Airports that have Departure Procedures (DPs) designed specifically to assist pilots in avoiding obstacles during the climb to the minimum enroute altitude, and/or airports that have civil IFR takeoff minimums other than standard, are listed below. Takeoff Minimums and Departure Procedures apply to all runways unless otherwise specified. An entry may also be listed that contains only Takeoff Obstacle Notes. Altitudes, unless otherwise indicated, are minimum altitudes in MSL.

DPs specifically designed for obstacle avoidance are referred to as Obstacle Departure Procedures (ODPs) and are textually described below, or published separately as a graphic procedure. If the ODP is published as a graphic procedure, its name will be listed below, and it can be found in either this volume (civil), or the applicable military volume, as appropriate. Users will recognize graphic obstacle DPs by the term "(OBSTACLE)" included in the procedure title; e.g., TETON TWO (OBSTACLE). If not specifically assigned an ODP, SID, or RADAR vector as part of an IFR clearance, an ODP may be required to be flown for obstacle clearance, even though not specifically stated in the IFR clearance. When doing so in this manner, ATC should be informed when the ODP being used contains a specified route to be flown, restrictions before turning, and/or altitude restrictions.

Some ODPs, which are established solely for obstacle avoidance, require a climb in visual conditions to cross the airport, a fix, or a NAVAID in a specified direction, at or above a specified altitude. These procedures are called Visual Climb Over Airport (VCOA). To ensure safe and efficient operations, the pilot must verbally request approval from ATC to fly the VCOA when requesting their IFR clearance.

At some locations where an ODP has been established, a diverse vector area (DVA) may be created to allow RADAR vectors to be used in lieu of an ODP. DVA information will state that headings will be as assigned by ATC and climb gradients, when applicable, will be published immediately following the specified departure procedure.

Graphic DPs designed by ATC to standardize traffic flows, ensure aircraft separation and enhance capacity are referred to as "Standard Instrument Departures (SIDs)". SIDs also provide obstacle clearance and are published under the appropriate airport section. ATC clearance must be received prior to flying a SID.

CIVIL USERS NOTE: Title 14 Code of Federal Regulations Part 91 prescribes standard takeoff rules and establishes takeoff minimums for certain operators as follows: (1) For aircraft, other than helicopters, having two engines or less – one statute mile visibility. (2) For aircraft having more than two engines – one-half statute mile visibility. (3) For helicopters – one-half statute mile visibility. These standard minima apply in the absence of any different minima listed below.

MILITARY USERS NOTE: Civil (nonstandard) takeoff minima are published below. For military takeoff minima, refer to appropriate service directives.

22 FEB 2024 to 21 MAR 2024
22 FEB 2024 to 21 MAR 2024

AGUADILLA, PR

RAFAEL HERNANDEZ (BQN) (TJBQ)

TAKEOFF MINIMUMS AND (OBSTACLE) DEPARTURE PROCEDURES

ORIG-A 08SEP22 (22251) (FAA)

TAKEOFF MINIMUMS:

Rwy 26, climb on a heading between 240° CW to 082° from DER.

DEPARTURE PROCEDURE:

Rwy 8, climb on a heading between 262° CW to 158° from DER.

Rwy 26, climb on a heading between 230° CW to 082° from DER.

TAKEOFF OBSTACLE NOTES:

Rwy 8, tower 4053’ from DER, 986’ right of centerline, 100’ AGL/320’ MSL.

Rwy 26, vehicle on road 831’ from DER, 420’ left of centerline, 258’ MSL.

Tree 1153’ from DER, 562’ right of centerline, 274’ MSL.

Trees beginning 1291’ from DER, 447’ right of centerline, up to 275’ MSL..

APALACHICOLA, FL

APALACHICOLA RGNL-CLEVE RANDOLPH FLD (AAF)

TAKEOFF MINIMUMS AND (OBSTACLE) DEPARTURE PROCEDURES

AMDT 1A 24JUL14 (21224) (FAA)

TAKEOFF OBSTACLE NOTES:

Rwy 6, trees beginning 1152' from DER, 97' left of centerline, up to 83' AGL/101' MSL.

Trees beginning 22' from DER, 14' right of centerline, up to 89' AGL/108' MSL.

Rwy 14, trees beginning 32' from DER, 63' left of centerline, up to 78' AGL/97' MSL.

Trees beginning 2137' from DER, 67' right of centerline, up to 89' AGL/99' MSL.

Rwy 18, tree beginning 513' from DER, 193' right of centerline, 100' AGL/120' MSL.

Rwy 24, trees beginning 71' from DER, 77' left of centerline, up to 76' AGL/88' MSL.

Poles beginning 583' from DER, 268' left of centerline, up to 28' AGL/47' MSL.

Bush 1018' from DER, 394' left of centerline, 30' AGL/47' MSL.

Rwy 32, trees beginning 52' from DER, 88' left of centerline, up to 69' AGL/82' MSL.

Trees beginning 137' from DER, 75' right of centerline, up to 71' AGL/87' MSL.

Rwy 36, trees beginning 3408' from DER, 327' left of centerline, 100' AGL/113’ MSL.

Tree 1397' from DER, 441' right of centerline, 100' AGL/109' MSL.

APOPKA, FL

ORLANDO APOPKA (X04)

TAKEOFF MINIMUMS AND (OBSTACLE) DEPARTURE PROCEDURES

ORIG 20SEP12 (12264) (FAA)

TAKEOFF MINIMUMS:

Rwy 15, 300-2 or std. w/min. climb of 263' per NM to 400.

Rwy 33, 400-1¾ or std. w/min. climb of 325' per NM to 600.

TAKEOFF OBSTACLE NOTES:

Rwy 15, trees beginning at DER, 173' left of centerline, up to 100' AGL/229' MSL.
Railroad and vehicles beginning at DER, 181' left of centerline, up to 23' AGL/152' MSL.
Trees beginning 214' from DER, 552' right of centerline, up to 100' AGL/189' MSL.
Poles beginning 230' from DER, 239' left of centerline, up to 49' AGL/178' MSL.
Tower 5781' from DER, 1326' left of centerline, 199' AGL/317' MSL.
Rwy 33, trees beginning 2' from DER, 183' left of centerline, up to 100' AGL/249' MSL.
Poles beginning 7' from DER, 61' right of centerline, up to 49' AGL/198' MSL.
Railroad and vehicles beginning 36' from DER, 90' right of centerline, up to 23' AGL/172' MSL.
Antenna 1166' from DER, 539' left of centerline, 29' AGL/173' MSL.
Tower 1.2 NM from DER, 2338' left of centerline, 350' AGL/421' MSL.

ARCADIA, FL

ARCADIA MUNI (X06)

TAKEOFF MINIMUMS AND (OBSTACLE) DEPARTURE PROCEDURES

ORIG-A 11AUG22 (22223) (FAA)

TAKEOFF MINIMUMS:

Rwys 14, 32, NA-Environmental.

TAKEOFF OBSTACLE NOTES:

Rwy 6, trees beginning 6' from DER, 107' left of centerline, up to 20' AGL/81' MSL.
Rwy 24, vehicle on road 234' from DER, 538' right of centerline 15' AGL/74' MSL.
Trees beginning 315' from DER, 120' left of centerline, up to 50' AGL/109' MSL.
Trees beginning 340' from DER, 435' right of centerline, up to 40' AGL/95' MSL.
Building 449' from DER, 409' left of centerline, 25' AGL/84' MSL.

AVON PARK, FL

AVON PARK EXEC (AVO)

TAKEOFF MINIMUMS AND (OBSTACLE) DEPARTURE PROCEDURES

AMDT 1 17DEC09 (22195) (FAA)

TAKEOFF MINIMUMS:

Rwy 5, 300-1 or std. w/min. climb of 430' per NM to 500.

TAKEOFF OBSTACLE NOTES:

Rwy 5, trees beginning 219' from DER, 84' left of centerline, up to 100' AGL/284' MSL.
Trees beginning 1007' from DER, 298' right of centerline, up to 100' AGL/289' MSL.
Building 327' from DER, 431' right of centerline, 21' AGL/182' MSL.
Rwy 10, buildings beginning 293' from DER, 251' left of centerline, up to 30' AGL/285' MSL.
Line of trees beginning 298' from DER, 149' right to 229' left of centerline, up to 100' AGL/269' MSL.
Rwy 23, trees beginning 52' from DER, 118' right of centerline, up to 26' AGL/186' MSL.
Trees beginning 23' from DER, 93' left of centerline, up to 38' AGL/198' MSL.
Power lines beginning 2691' from DER, 1019' left to 2034' right of centerline, up to 79' AGL/235' MSL.
Rwy 28, numerous trees beginning 371' from DER, 218' right of centerline, up to 100' AGL/259' MSL.
Buildings and light poles beginning 1491' from DER, 187' left of centerline, up to 40' AGL/194' MSL.
Power pylons beginning 2082' from DER, 935' left to 252' right of centerline, up to 79' AGL/233' MSL.

BARTOW, FL

BARTOW EXEC (BOW)

TAKEOFF MINIMUMS AND (OBSTACLE) DEPARTURE PROCEDURES

ORIG-A 15AUG19 (21168) (FAA)

TAKEOFF OBSTACLE NOTES:

Rwy 5, tree 164' from DER, 397' right of centerline, 156' MSL.
Tree 285' from DER, 303' right of centerline, 157' MSL.
Trees beginning 290' from DER, 406' right of centerline, up to 165' MSL.
Trees beginning 414' from DER, 166' right of centerline, up to 166' MSL.
Trees beginning 631' from DER, 59' right of centerline, up to 169' MSL.
Tree 937' from DER, 432' left of centerline, 152' MSL.
Trees beginning 969' from DER, 19' left of centerline, up to 172' MSL.
Trees beginning 1095' from DER, 9' left of centerline, up to 176' MSL.
Trees beginning 1225' from DER, 234' left of centerline, up to 186' MSL.
Trees beginning 1226' from DER, 68' right of centerline, up to 175' MSL.
Trees beginning 1263' from DER, 115' right of centerline, up to 176' MSL.
Trees beginning 1442' from DER, 16' left of centerline, up to 190' MSL.
Tree 1676' from DER, 8' right of centerline, 178' MSL.
Trees beginning 1737' from DER, 31' right of centerline, up to 184' MSL.
Trees beginning 1842' from DER, 53' left of centerline, up to 192' MSL.
Tree 2498' from DER, 278' left of centerline, 196' MSL.
Tree 2613' from DER, 213' left of centerline, 198' MSL.
Rwy 9L, tree 15' from DER, 497' left of centerline, 148' MSL.
Tree 49' from DER, 466' right of centerline, 140' MSL.
Trees beginning 227' from DER, 19' left of centerline, up to 149' MSL.
Trees beginning 911' from DER, 53' right of centerline, up to 173' MSL.
Tree 1260' from DER, 155' left of centerline, 155' MSL.
Tree 1603' from DER, 265' left of centerline, 156' MSL.
Trees beginning 1715' from DER, 261' left of centerline, up to 169' MSL.
Tree 1790' from DER, 163' left of centerline, 170' MSL.
Tree 2256' from DER, 304' left of centerline, 174' MSL.
Rwy 9R, tree 637' from DER, 533' left of centerline, 140' MSL.
Tree 1310' from DER, 253' right of centerline, 167' MSL.
Trees beginning 1499' from DER, 166' left of centerline, up to 173' MSL.
Tree 1695' from DER, 197' right of centerline, 178' MSL.
Rwy 23, tree 143' from DER, 442' left of centerline, 144' MSL.
Tree 289' from DER, 363' left of centerline, 146' MSL.
Tree 299' from DER, 525' left of centerline, 147' MSL.
Tree 416' from DER, 561' left of centerline, 153' MSL.
Trees beginning 418' from DER, 320' left of centerline, up to 158' MSL.
Trees beginning 419' from DER, 395' right of centerline, up to 167' MSL.
Trees beginning 567' from DER, 86' left of centerline, up to 172' MSL.
Tree 842' from DER, 629' right of centerline, 171' MSL.
Trees beginning 865' from DER, 32' right of centerline, up to 175' MSL.
Trees beginning 1730' from DER, 122' left of centerline, up to 180' MSL.
Trees beginning 1777' from DER, 425' right of centerline, up to 176' MSL.
Trees beginning 2136' from DER, 493' right of centerline, up to 179' MSL.
Rwy 27L, tree 939' from DER, 643' left of centerline, 170' MSL.
Tree 2007' from DER, 906' right of centerline, 166' MSL.
Tree 2065' from DER, 517' right of centerline, 167' MSL.
Trees beginning 2338' from DER, 602' right of centerline, up to 175' MSL.
Pole 2554' from DER, 996' right of centerline, 49' AGL/177' MSL.
Tower 2881' from DER, 1015' left of centerline, 50' AGL/187' MSL.
Rwy 27R, pole 1259' from DER, 668' right of centerline, 36' AGL/150' MSL.
Trees beginning 1993' from DER, 410' right of centerline, up to 186' MSL.
Trees beginning 2109' from DER, 158' right of centerline, up to 193' MSL.

BOCA RATON, FL

BOCA RATON (BCT)

TAKEOFF MINIMUMS AND (OBSTACLE) DEPARTURE PROCEDURES

ORIG 28SEP06 (06271) (FAA)

TAKEOFF MINIMUMS:

Rwy 23, 300-1, or std. w/ a min. climb of 230' per NM to 300. Alternatively, with standard takeoff minimums and a normal 200'/NM climb gradient, takeoff must occur no later than 1700' prior to DER.

TAKEOFF OBSTACLE NOTES:

Rwy 5, numerous trees and poles beginning 185' from DER, 20' left of centerline, up to 35' AGL/49' MSL.
Numerous trees and poles beginning 6' from DER, 267' right of centerline, up to 28' AGL/45' MSL.
Rwy 23, numerous trees, poles, and buildings beginning 278' from DER, 41' left of centerline, up to 137' AGL/154' MSL.
Numerous trees, poles and buildings beginning 626' from DER, 171' right of centerline, up to 154' AGL/171' MSL.

22 FEB 2024 to 21 MAR 2024
22 FEB 2024 to 21 MAR 2024

BONIFAY, FL

TRI-COUNTY (BCR)

TAKEOFF MINIMUMS AND (OBSTACLE) DEPARTURE PROCEDURES

AMDT 1 02DEC21 (21336) (FAA)

TAKEOFF MINIMUMS:

Rwy 1, 300 and 1¼ or std. w/min. climb of 220' per NM to 300.

DEPARTURE PROCEDURE:

Rwy 1, climb on heading 013° to 1300 before turning west.

Rwy 19, climb on heading 193° to 800 before turning west.

TAKEOFF OBSTACLE NOTES:

Rwy 1, trees, fence beginning 27' from DER, 250' right of centerline, up to 64' AGL/144' MSL.
Poles, terrain, vehicle on road, fence, tree beginning 42' from DER, 213' left of centerline, up to 35' AGL/124' MSL.
Trees beginning 373' from DER, 308' right of centerline, up to 67' AGL/146' MSL.
Trees, pole beginning 470' from DER, 125' right of centerline, up to 81' AGL/160' MSL.
Tree 991' from DER, 721' left of centerline, 61' AGL/152' MSL.
Trees, pole beginning 1032' from DER, 463' left of centerline, up to 63' AGL/154' MSL.
Trees, pole beginning 1258' from DER, 66' left of centerline, up to 71' AGL/163' MSL.
Trees beginning 1515' from DER, 119' right of centerline, up to 74' AGL/161' MSL.
Trees beginning 1551' from DER, 190' right of centerline, up to 83' AGL/165' MSL.
Trees beginning 1562' from DER, 7' right of centerline, up to 85' AGL/171' MSL.
Trees beginning 1626' from DER, 476' left of centerline, up to 93' AGL/183' MSL.
Trees beginning 1704' from DER, 2' left of centerline, up to 99' AGL/189' MSL.
Trees beginning 2138' from DER, 2' right of centerline, up to 97' AGL/176' MSL.
Trees beginning 2259' from DER, 2' right of centerline, up to 101' AGL/181' MSL.
Trees beginning 2571' from DER, 11' left of centerline, up to 103' AGL/194' MSL.
Trees beginning 2647' from DER, 2' right of centerline, up to 103' AGL/184' MSL.
Tree 2957' from DER, 879' left of centerline, 110' AGL/199' MSL.
Trees beginning 2960' from DER, 10' right of centerline, up to 115' AGL/195' MSL.
Trees beginning 2961' from DER, 1' left of centerline, up to 114' AGL/201' MSL.
Trees beginning 3244' from DER, 837' right of centerline, up to 115' AGL/196' MSL.
Trees beginning 3464' from DER, 1092' right of centerline, up to 117' AGL/197' MSL.
Trees beginning 3552' from DER, 872' left of centerline, up to 86' AGL/202' MSL.
Trees beginning 3636' from DER, 32' right of centerline, up to 119' AGL/200' MSL.
Trees beginning 3672' from DER, 1' left of centerline, up to 79' AGL/204' MSL.
Tree 4231' from DER, 470' left of centerline, 69' AGL/206' MSL.
Tree 4259' from DER, 560' left of centerline, 75' AGL/212' MSL.
Trees beginning 4293' from DER, 193' left of centerline, up to 80' AGL/217' MSL.
Trees beginning 4576' from DER, 416' right of centerline, up to 75' AGL/202' MSL.
Trees beginning 4691' from DER, 487' right of centerline, up to 78' AGL/205' MSL.
Trees beginning 4864' from DER, 487' right of centerline, up to 84' AGL/211' MSL.
Trees beginning 4926' from DER, 281' left of centerline, up to 85' AGL/221' MSL.
Tree 5164' from DER, 532' right of centerline, 84' AGL/216' MSL.
Trees beginning 5186' from DER, 539' right of centerline, up to 98' AGL/225' MSL.
Tree 5719' from DER, 351' left of centerline, 73' AGL/227' MSL.
Tree 5747' from DER, 332' left of centerline, 78' AGL/232' MSL.
Trees beginning 5765' from DER, 263' left of centerline, up to 87' AGL/239' MSL.
Trees beginning 5985' from DER, 343' left of centerline, up to 86' AGL/240' MSL.
Tree 1 NM from DER, 493' left of centerline, 85' AGL/244' MSL.
Tree 1 NM from DER, 581' left of centerline, 89' AGL/247' MSL.

Rwy 19, tree 52' from DER, 454' left of centerline, 57' AGL/138' MSL.
Terrain beginning 75' from DER, 296' right of centerline, up to 102' MSL.
Terrain beginning 163' from DER, 331' right of centerline, up to 103' MSL.
Trees beginning 173' from DER, 339' left of centerline, up to 64' AGL/145' MSL.
Terrain beginning 274' from DER, 353' right of centerline, up to 106' MSL.
Trees beginning 311' from DER, 378' left of centerline, up to 74' AGL/153' MSL.
Tree 391' from DER, 553' right of centerline, 67' AGL/163' MSL.
Tree 489' from DER, 512' right of centerline, 71' AGL/164' MSL.
Trees beginning 531' from DER, 382' left of centerline, up to 79' AGL/156' MSL.
Trees beginning 566' from DER, 506' right of centerline, up to 80' AGL/169' MSL.
Trees beginning 829' from DER, 431' left of centerline, up to 69' AGL/157' MSL.
Trees beginning 830' from DER, 459' right of centerline, up to 94' AGL/183' MSL.
Tree 1414' from DER, 615' left of centerline, 76' AGL/158' MSL.
Trees beginning 1505' from DER, 643' left of centerline, up to 79' AGL/160' MSL.
Trees beginning 1546' from DER, 550' left of centerline, up to 89' AGL/164' MSL.
Trees beginning 1606' from DER, 6' right of centerline, up to 104' AGL/187' MSL.
Trees beginning 1654' from DER, 579' left of centerline, up to 94' AGL/171' MSL.
Trees beginning 2011' from DER, 6' left of centerline, up to 102' AGL/176' MSL.
Trees beginning 2579' from DER, 5' left of centerline, up to 100' AGL/180' MSL.
Trees beginning 2744' from DER, 53' left of centerline, up to 101' AGL/181' MSL.
Trees beginning 3313' from DER, 134' right of centerline, up to 111' AGL/189' MSL.

22 FEB 2024 to 21 MAR 2024
22 FEB 2024 to 21 MAR 2024

BROOKSVILLE, FL

BROOKSVILLE-TAMPA BAY RGNL (BKV)

TAKEOFF MINIMUMS AND (OBSTACLE) DEPARTURE PROCEDURES

ORIG-A 24JUL14 (14205) (FAA)

TAKEOFF MINIMUMS:

Rwy 9, 300-1¼ or std. w/ a min. climb of 220' per NM to 300, or alternatively, with standard takeoff minimums and a normal 200'/NM climb gradient, takeoff must occur no later than 1200' prior to DER.

TAKEOFF OBSTACLE NOTES:

Rwy 3, obstruction light and trees beginning 297' from DER, 34' right of centerline, up to 81' AGL/151' MSL.
Trees beginning 1681' from DER, 29' left of centerline, up to 83' AGL/153' MSL.
Rwy 9, trees 9' from DER, 287' right of centerline, up to 69' AGL/73' MSL.
Trees beginning 2021' left and right of centerline, up to 92' AGL/171' MSL.
Rwy 21, pole and trees beginning 46' from DER, 27' right of centerline, up to 70' AGL/138' MSL.
Building and trees beginning 108' from DER, 39' left of centerline, up to 85' AGL/155' MSL.
Rwy 27, trees 2143' from DER, 891' left of centerline, up to 89' AGL/189' MSL.
Trees 4755' from DER, 1684' right of centerline, up to 99' AGL/199' MSL.

CAPE CANAVERAL SFS SKID STRIP (KXMR)

COCOA BEACH, FL

TAKEOFF MINIMUMS AND (OBSTACLE) DEPARTURE PROCEDURES

AMDT 3 19MAY22 (22139) (USSF)

DEPARTURE PROCEDURE:

Rwy 13, diverse departure authorized 125° CW to 310° only.
Rwy 31, diverse departure authorized 322° CCW to 143° only.

TAKEOFF OBSTACLE NOTES:

Rwy 13, terrain at DER, 434' left of centerline, 13' MSL.
Terrain at DER, 500' right of centerline, 15' MSL.
Rwy 31, terrain on DER, 353' right of centerline, 16' MSL.
Terrain on DER, 500' left of centerline, 17' MSL.
Brushline 143' from DER, 501' left of centerline, 18' MSL.
Brushline 220' from DER, 510' left of centerline, 18' MSL.
Brushline 305' from DER, 509' left of centerline, 19' MSL.
Brushline 573' from DER, 621' right of centerline, 26' MSL.

CHARLOTTE AMALIE, VI

CYRIL E KING (STT) (TIST)

TAKEOFF MINIMUMS AND (OBSTACLE) DEPARTURE PROCEDURES

AMDT 1 05JUN08 (21280) (FAA)

TAKEOFF MINIMUMS:

Rwy 10, 400-1 w/min. climb of 462' per NM to 1400 or 2100-2½ for climb in visual conditions.
Rwy 28, 800-3 or std. w/min. climb of 366' per NM to 1000.

DEPARTURE PROCEDURE:

Rwy 10, climbing right turn heading 120° to 2000 before turning north or for climb in visual conditions, cross Cyril E King airport at or above 2000 before proceeding on course.
Rwy 28, climb heading 280° to 2000 before turning north.

TAKEOFF OBSTACLE NOTES:

Rwy 10, antenna on building 258' from DER, 485' left of centerline, 25' AGL/41' MSL.
Multiple trees beginning 729' from DER, 244' right of centerline up to 100' AGL/259' MSL.
Pole 300' from DER, 430' right of centerline, 23' AGL/39' MSL.
Rwy 28, antenna 33' from DER, 412' left of centerline, 16' AGL/29' MSL.
Bush 175' from DER, 178' right of centerline, 2' AGL/29' MSL.
Bush 206' from DER, 121' left of centerline, 2' AGL/29' MSL.
Trees beginning 2.39 NM from DER, 4351' right of centerline, 100' AGL/710' MSL.

22 FEB 2024 to 21 MAR 2024
22 FEB 2024 to 21 MAR 2024

CHRISTIANSTED, ST. CROIX, VI
HENRY E. ROHLSEN (STX) (TISX)
TAKEOFF MINIMUMS AND (OBSTACLE) DEPARTURE PROCEDURES
AMDT 9 29MAY14 (21280) (FAA)
TAKEOFF MINIMUMS:
Rwy 10, 300-1¾ or std. w/min. climb of 300' per NM to 300.
DEPARTURE PROCEDURE:
Rwy 10, climb heading 108° to 1300 before proceeding on course.
Rwy 28, climb heading 277° to 1200 before proceeding on course.
TAKEOFF OBSTACLE NOTES:
Rwy 10, bushes beginning 103' from DER, 283' right of centerline, up to 10' AGL/32' MSL.
Pole 794' from DER, 572' right of centerline, up to 29' AGL/44' MSL.
Bushes beginning 127' from DER, 324' left of centerline, up to 10' AGL/34' MSL.
Pole 595' from DER, 653' left of centerline, up to 41' AGL/62' MSL.
Trees beginning 935' from DER, 562' left of centerline, up to 29' AGL/70' MSL.
Refinery buildings beginning 5289' from DER, 798' left of centerline, up to 203' AGL/231' MSL.
Rwy 28, trees beginning 517' from DER, 553' right of centerline, up to 53' AGL/114' MSL.
Tower 1499' from DER, 802' right of centerline, 50' AGL/140' MSL.

CLEWISTON, FL
AIRGLADES (2IS)
TAKEOFF MINIMUMS AND (OBSTACLE) DEPARTURE PROCEDURES
ORIG 12MAR09 (09071) (FAA)
TAKEOFF OBSTACLE NOTES:
Rwy 31, vehicle on road, 362' from DER, 578' right of centerline, 15' AGL/38' MSL.

CRESTVIEW, FL
BOB SIKES (CEW)
TAKEOFF MINIMUMS AND (OBSTACLE) DEPARTURE PROCEDURES
ORIG 31JUL08 (08213) (FAA)
TAKEOFF OBSTACLE NOTES:
Rwy 17, trees beginning 92' from DER, 248' right of centerline up to 100' AGL/203' MSL.
Trees beginning 171' from DER, 9' left of centerline, up to 100' AGL/205' MSL.
Rwy 35, trees beginning 329' from DER, 222' right of centerline up to 100' AGL/272' MSL.
Trees beginning 152' from DER, 184' left of centerline, up to 100' AGL/278' MSL.

CROSS CITY, FL
CROSS CITY (CTY)
TAKEOFF MINIMUMS AND (OBSTACLE) DEPARTURE PROCEDURES
ORIG 05JUN08 (08157) (FAA)
TAKEOFF OBSTACLE NOTES:
Rwy 4, trees beginning 527' from DER, left and right of centerline, up to 100' AGL/149' MSL.
Rwy 13, trees beginning 158' from DER, left and right of centerline, up to 100' AGL/149' MSL.
Tank 3302' from DER, 927' right of centerline, 101' AGL/141' MSL.
Rwy 22, trees beginning 1510' from DER, left and right of centerline, up to 100' AGL/149' MSL.
Power lines 2807' from DER, 58' left of centerline, 73' AGL/114' MSL.
Rwy 31, trees beginning 195' from DER, left and right of centerline, up to 100' AGL/149' MSL.

CRYSTAL RIVER, FL
CRYSTAL RIVER-CAPT TOM DAVIS FLD (CGC)
TAKEOFF MINIMUMS AND (OBSTACLE) DEPARTURE PROCEDURES
ORIG-A 11DEC14 (22195) (FAA)
TAKEOFF MINIMUMS:
Rwy 9, std. w/min. climb of 260' per NM to 600, or 500-2¾ with min. climb of 210' per NM to 900, or 900-2½ for climb in visual conditions.
Rwys 18, 36, NA-Environmental.
DEPARTURE PROCEDURE:
Rwy 9, climb heading 096º to 700 before turning right, or for climb in visual conditions cross Crystal River-Capt Tom Davis Fld at or above 800 before proceeding on course.
TAKEOFF OBSTACLE NOTES:
Rwy 9, vehicles on road beginning 6' from DER, from left to right of centerline, up to 15' AGL/24' MSL.
Multiple trees beginning 364' from DER, from 680' left of centerline to 820' right of centerline, up to 100' AGL/129' MSL.
Rwy 27, trees 17' from DER, 484' right of centerline, up to 100' AGL/109' MSL.
Vehicles on road beginning 368' from DER, from left to right of centerline, up to 15' AGL/24' MSL.
Power line beginning 474' from DER, from left to right of centerline, up to 26' AGL/45' MSL.
Building 916' from DER, on centerline, 26' AGL/35' MSL.
Multiple trees beginning 762' from DER, from 915' left of centerline to 641' right of centerline, up to 100' AGL/119' MSL.

DAYTONA BEACH, FL

DAYTONA BEACH INTL (DAB)

TAKEOFF MINIMUMS AND (OBSTACLE) DEPARTURE PROCEDURES

AMDT 4 27AUG09 (09239) (FAA)

TAKEOFF OBSTACLE NOTES:

Rwy 7L, multiple trees beginning 1834' from DER, 646' right of centerline, up to 64' AGL/95' MSL.
Rwy 7R, tower, trees beginning 1042' from DER, 413' right of centerline, up to 100' AGL/135' MSL.
Hanger, multiple trees beginning 901' from DER, 55' left of centerline, up to 67' AGL/101' MSL.
Rwy 16, multiple trees beginning 57' from DER, 19' left of centerline, up to 75' AGL/104' MSL.
Multiple trees beginning 871' from DER, 3' right of centerline, up to 83' AGL/112' MSL.
Rwy 25L, multiple trees beginning 123' from DER, 75' left of centerline, up to 80' AGL/109' MSL.
Multiple trees and antenna beginning 1002' from DER, 85' right of centerline, up to 72' AGL/101' MSL.
Rwy 25R, multiple trees, signs, and poles beginning 428' from DER, 38' right of centerline, up to 88' AGL/115' MSL. Multiple trees beginning 1254' from DER, 41' left of centerline, up to 84' AGL/108' MSL.
Rwy 34, multiple trees, building and obstruction light beginning 1013' from DER, 90' left of centerline, up to 82' AGL/111' MSL.
Multiple trees, beginning 1108' from DER, 6' right of centerline, up to 78' AGL/107' MSL.

DEFUNIAK SPRINGS, FL

DEFUNIAK SPRINGS (54J)

TAKEOFF MINIMUMS AND (OBSTACLE) DEPARTURE PROCEDURES

ORIG 07MAY09 (09127) (FAA)

TAKEOFF MINIMUMS:

Rwy 9, 400-2¼ or std. w/ min. climb of 254' per NM to 800.
Rwys 18,36, NA - dirt.

TAKEOFF OBSTACLE NOTES:

Rwy 9, multiple roads, railroad, building, fence, light on pole, poles, signs, towers and trees beginning 25' from DER, 1' left of centerline, up to 431' AGL/617' MSL.
Multiple trees and roads beginning 71' from DER, 118' right of centerline, up to 74' AGL/343' MSL.
Rwy 27, multiple trees, poles, fences, roads and building beginning 8' from DER, 39' left of centerline, up to 64' AGL/353' MSL.
Multiple trees, poles, roads, buildings and light on pole beginning 82' from DER, 15' right of centerline, up to 53' AGL/342' MSL.

DELAND, FL

DELAND MUNI-SIDNEY H TAYLOR FLD (DED)

TAKEOFF MINIMUMS AND (OBSTACLE) DEPARTURE PROCEDURES

AMDT 3 08JUN06 (22195) (FAA)

DEPARTURE PROCEDURE:

Rwy 5, climb via heading 054° to 1800 before proceeding on course.
Rwy 12, climb via heading 122° to 1800 before proceeding on course.
Rwy 23, climb via heading 234° to 1800 before proceeding on course.
Rwy 30, climb via heading 302° to 1800 before proceeding on course.

TAKEOFF OBSTACLE NOTES:

Rwy 5, numerous trees beginning 64' from DER, 245' left of centerline, up to 100' AGL/143' MSL.
Numerous trees beginning 869' from DER, 410' right of centerline, up to 100' AGL/154' MSL.
Rwy 12, numerous trees beginning 154' from DER, 129' left of centerline, up to 100' AGL/153' MSL.
Numerous trees beginning 456' from DER, 289' right of centerline, up to 100' AGL/162' MSL.
Rwy 30, numerous trees beginning 624' from DER, 9' left of centerline, up to 100' AGL/156' MSL.
Numerous trees beginning 159' from DER, 341' right of centerline, up to 100' AGL/162' MSL.
Rwy 23, light pole and numerous trees beginning 381' from DER, 44' right of centerline, up to 100' AGL/132' MSL.
Pole, building, vent on building, hangar, and trees beginning 164' from DER, 26' left of centerline, up to 100' AGL/129' MSL.

DESTIN, FL

DESTIN EXEC (DTS)
TAKEOFF MINIMUMS AND (OBSTACLE) DEPARTURE PROCEDURES
ORIG-C 07DEC17 (21168) (FAA)

TAKEOFF MINIMUMS:
Rwy 14, 200-1⅛ or std. w/min. climb of 253' per NM to 300.

DEPARTURE PROCEDURE:
Rwy 14, climb heading 141° to 500 before turning.

TAKEOFF OBSTACLE NOTES:
Rwy 14, tree 173' from DER, 381' left of centerline, 48' MSL.
Pole 214' from DER, 477' right of centerline, 26' AGL/43' MSL.
Trees beginning 290' from DER, 350' left of centerline, up to 57' MSL.
Tree 524' from DER, 602' left of centerline, 69' MSL.
Trees beginning 630' from DER, 362' left of centerline, up to 71' MSL.
Pole 2410' from DER, 522' right of centerline, 59' AGL/82' MSL.
Poles beginning 2832' from DER, 77' right of centerline, up to 70' AGL/94' MSL.
Buildings beginning 3752' from DER, 1146' left of centerline, up to 128' AGL/149' MSL.
Building 4098' from DER, 103' right of centerline, 122' AGL/137' MSL.
Building 4526' from DER, 579' left of centerline, 148' AGL/169' MSL.
Building 4711' from DER, 236' right of centerline, 129' AGL/139' MSL.
Vertical structure, buildings beginning 4942' from DER, 412' left of centerline, up to 162' AGL/176' MSL.
Rwy 32, trees, building, pole beginning 66' from DER, 455' left of centerline, up to 56' MSL.
Trees beginning 79' from DER, 359' right of centerline, up to 78' MSL.
Trees beginning 220' from DER, 439' right of centerline, up to 82' MSL.
Trees beginning 480' from DER, 31' right of centerline, up to 84' MSL.
Trees beginning 586' from DER, 64' left of centerline, up to 81' MSL.
Trees beginning 1592' from DER, 91' left of centerline, up to 83' MSL.

DUNNELLON, FL

MARION COUNTY (X35)
TAKEOFF MINIMUMS AND (OBSTACLE) DEPARTURE PROCEDURES
AMDT 1A 13SEP18 (18256) (FAA)

TAKEOFF OBSTACLE NOTES:
Rwy 5, trees beginning 308' from DER, 265' right of centerline, up to 100' AGL/179' MSL.
Trees beginning 114' from DER, 170' left of centerline, up to 100' AGL/199' MSL.
Rwy 10, trees beginning 85' from DER, 276' right of centerline, up to 100' AGL/164' MSL.
Trees beginning 82' from DER, 311' left of centerline, up to 100' AGL/164' MSL.
Rwy 23, trees beginning 1100' from DER, 431' right of centerline, up to 100' AGL/179' MSL.
Trees beginning 601' from DER, 610' left of centerline, up to 100' AGL/169' MSL.
Rwy 28, trees beginning 268' from DER, 404' right of centerline, up to 100' AGL/169' MSL.
Trees beginning 363' from DER, 273' left of centerline, up to 100' AGL/179' MSL.

FERNANDINA BEACH, FL

FERNANDINA BEACH MUNI (FHB)
TAKEOFF MINIMUMS AND (OBSTACLE) DEPARTURE PROCEDURES
AMDT 1 19SEP13 (13262) (FAA)

TAKEOFF OBSTACLE NOTES:
Rwy 4, trees beginning 317' from DER, 11' left of centerline, up to 100' AGL/110' MSL.
Wall 77' from DER, 301' left of centerline, 6' AGL/20' MSL.
Vehicle on road 552' from DER, 437' left of centerline, 15' AGL/29' MSL.
Poles beginning 178' from DER, 441' left of centerline, 39' AGL/52' MSL.
Fence 71' from DER, 311' left of centerline, 10' AGL/23' MSL.
Trees beginning 660' from DER, 4' right of centerline, up to 105' AGL/115' MSL.
Signs beginning 112' from DER, 292' right of centerline, up to 78' AGL/92' MSL.
Rwy 9, trees beginning 210' from DER, 15' left of centerline, up to 92' AGL/107' MSL.
Vehicle on road 463' from DER, 252' left of centerline, 15' AGL/30' MSL.
Trees beginning 39' from DER, 17' right of centerline, up to 82' AGL/97' MSL.
Vehicle on road beginning 422' from DER, 129' right of centerline, 15' AGL/30' MSL.
Rwy 13, trees beginning 503' from DER. 7' left of centerline, up to 84' AGL/99' MSL.
Vehicle on road beginning 426' from DER, 309' left of centerline 15' AGL/up to 35' MSL.
Trees beginning 19' from DER, 12' right of centerline, up to 85' AGL/100' MSL.
Vehicle on road beginning 355' from DER, 70' right of centerline, up to 15' AGL/31' MSL.
Multiple buildings beginning 4513' from DER, 286' right of centerline, up to 119' AGL/141' MSL.
Rwy 22, trees beginning 55' from DER, 118' left of centerline, up to 78' AGL/83' MSL.
Fence beginning 64' from DER, 267' left of centerline, 10' AGL/22' MSL.
Trees beginning 42' from DER, 210' right of centerline, up to 95' AGL/100' MSL.
Navaid 10' from DER, 85' right of centerline, 2' AGL/14' MSL.
Boat mast 2903' from DER, 336' right of centerline, up to 86' MSL.
CON'T

22 FEB 2024 to 21 MAR 2024
22 FEB 2024 to 21 MAR 2024

FERNANDINA BEACH, FL (CON'T)

FERNANDINA BEACH MUNI (FHB) (CON'T)

Rwy 27, trees beginning 195' from DER, 30' left of centerline, up to 99' AGL/104' MSL.
Trees beginning 836' from DER, 42' right of centerline, up to 96' AGL/101' MSL.
Bush 338' from DER, 186' right of centerline, 11' AGL/21' MSL.
Rwy 31, trees beginning 29' from DER, 216 left of centerline, up to 96' AGL/101' MSL.
Bush 24' from DER, 379' left of centerline, 11' AGL/21' MSL.
Trees beginning 646' from DER, 561' right of centerline, up to 71' AGL/81' MSL.

FORT LAUDERDALE, FL

FORT LAUDERDALE EXEC (FXE)

TAKEOFF MINIMUMS AND (OBSTACLE) DEPARTURE PROCEDURES
AMDT 5 25JUN15 (21168) (FAA)
DEPARTURE PROCEDURE:
Rwy 27, climb heading 271° to 600 before turning left.
TAKEOFF OBSTACLE NOTES:
Rwy 9, building 833' from DER, 721' left of centerline, 40' AGL/51' MSL.
Tree 1903' from DER, 484' right of centerline, 85' AGL/89' MSL.
Building 4130' from DER, 41' right of centerline, 122' AGL/129' MSL.
Building 4720' from DER, 78' right of centerline 150' AGL/157' MSL.
Rwy 13, buildings beginning 2' from DER, 465' left and 303 right of centerline, up to 32' AGL/42' MSL.
Trees, poles and buildings beginning 452' from DER, 290' left and 167' right of centerline up to 45' AGL/54' MSL.
Trees beginning 1976' from DER, 259' right of centerline, up to 92' AGL/101' MSL.
Tower 5130' from DER, 1826' right of centerline, 139' AGL/147' MSL.
Rwy 27, trees beginning 2040' from DER, 256' left of centerline up to 105' AGL/116' MSL.
Rwy 31, trees and pole beginning 703' from DER, 338' right of centerline, up to 66' AGL/81' MSL.
Building 1289' from DER, 290' left of centerline, 43' AGL/53' MSL.

FORT LAUDERDALE/HOLLYWOOD INTL (FLL)

TAKEOFF MINIMUMS AND (OBSTACLE) DEPARTURE PROCEDURES
AMDT 7 30JAN20 (20030) (FAA)
DEPARTURE PROCEDURE:
Rwy 10L, climb on heading 096° to 500 before turning left.
Rwy 28L, climb on heading 276° to 700 before turning left.
Rwy 28R, climb on heading 276° to 500 before turning left.
TAKEOFF OBSTACLE NOTES:
Rwy 10L, sign 54' from DER, 323' left of centerline, 4' AGL/7' MSL.
NAVAID 295' from DER, on centerline, 15' MSL.
Building 469' from DER, 378' left of centerline, 13' AGL/18' MSL.
NAVAID 495' from DER, 27' right of centerline, 19' MSL.
Lighting 496' from DER, 28' left of centerline, 16' AGL/20' MSL.
Lighting beginning 496' from DER, on centerline, up to 16' AGL/20' MSL.
Vehicle on traverse way beginning 509' from DER, 63' left of centerline, up to 30' MSL.
Lighting 667' from DER, on centerline, 19' AGL/23' MSL.
Pole, lighting beginning 845' from DER, on centerline, up to 28' MSL.
Vehicle on traverse way beginning 948' from DER, on centerline, up to 30' MSL.
Pole 1045' from DER, on centerline, 36' MSL.
Lighting 1047' from DER, on centerline, 33' AGL/37' MSL.
Pole 1289' from DER, 548' left of centerline, 45' AGL/47' MSL.
Pole 1332' from DER, 633' right of centerline, 44' AGL/46' MSL.
Tree 1850' from DER, 680' left of centerline, 53' MSL.
Tree 1980' from DER, 274' right of centerline, 65' MSL.
Trees beginning 2163' from DER, 780' right of centerline, up to 81' MSL.
Bridge 2428' from DER, 1123' left of centerline, 65' AGL/70' MSL.
Pole 2558' from DER, 827' left of centerline, 75' MSL.
Tree 3027' from DER, 920' right of centerline, 83' MSL.
Tree 3043' from DER, 1221' right of centerline, 87' MSL.
Rwy 10R, lighting 29' from DER, 23' left of centerline, 2' AGL/67' MSL.
Lighting 30' from DER, 23' right of centerline, 1' AGL/67' MSL.
Tree 953' from DER, 613' right of centerline, 90' MSL.
Rwy 28L, lighting 29' from DER, 22' right of centerline, 2' AGL/11' MSL.
Lighting 30' from DER, 23' left of centerline, 1' AGL/11' MSL.
Trees beginning 202' from DER, 397' left of centerline, up to 89' MSL.
Trees beginning 774' from DER, 399' left of centerline, up to 90' MSL.
Pole, building, tree beginning 866' from DER, 366' right of centerline, up to 40' AGL/45' MSL.
Building, tree, pole, vehicle on traverse way beginning 1317' from DER, 455' left of centerline, up to 109' MSL.
Tree 1377' from DER, 753' right of centerline, 68' AGL/71' MSL.
Trees beginning 1409' from DER, 625' right of centerline, up to 91' MSL.
Tree, pole beginning 1636' from DER, 314' right of centerline, up to 100' MSL.
Tower, antenna beginning 3191' from DER, 682' right of centerline, up to 108' AGL/111' MSL.
CON'T

FORT LAUDERDALE, FL (CON'T)

FORT LAUDERDALE/HOLLYWOOD INTL (FLL) (CON'T)

Rwy 28R, sign 29' from DER, 376' right of centerline, 3' AGL/8' MSL.
Building 261' from DER, 252' left of centerline, 14' AGL/18' MSL.
Lighting 262' from DER, on centerline, 12' AGL/18' MSL.
Vehicle on traverse way, fence beginning 324' from DER, 2' left of centerline, up to 15' AGL/21' MSL.
Vehicle on traverse way beginning 396' from DER, 101' right of centerline, up to 21' MSL.
Vehicle on traverse way, lighting beginning 441' from DER, 8' left of centerline, up to 25' MSL.
Lighting, vehicle on traverse way beginning 442' from DER, on centerline, up to 20' AGL/25' MSL.
Vehicle on traverse way beginning 481' from DER, 138' left of centerline, up to 17' AGL/27' MSL.
Vehicle on traverse way beginning 566' from DER, 39' left of centerline, up to 29' MSL.
Vehicle on traverse way, lighting beginning 583' from DER, on centerline, up to 33' MSL.
Vehicle on traverse way beginning 605' from DER, 42' left of centerline, up to 31' MSL.
Vehicle on traverse way beginning 849' from DER, 74' left of centerline, up to 34' MSL.
Lighting, NAVAID, vehicle on traverse way beginning 872' from DER, on centerline, up to 28' AGL/34' MSL.
Sign, tree beginning 1018' from DER, 193' left of centerline, up to 41' AGL/46' MSL.
Trees beginning 1192' from DER, 274' left of centerline, up to 54' MSL.
Trees beginning 1374' from DER, 827' right of centerline, up to 95' MSL.
Trees beginning 1579' from DER, 681' left of centerline, up to 74' MSL.
Trees beginning 1784' from DER, 122' left of centerline, up to 76' MSL.
Trees beginning 2232' from DER, 599' left of centerline, up to 97' MSL.
Trees beginning 2444' from DER, 354' left of centerline, up to 101' MSL.
Trees beginning 3347' from DER, 531' right of centerline, up to 112' MSL.

FORT MYERS, FL

PAGE FLD (FMY)

TAKEOFF MINIMUMS AND (OBSTACLE) DEPARTURE PROCEDURES
AMDT 5A 08NOV18 (21168) (FAA)
TAKEOFF OBSTACLE NOTES:
Rwy 5, traverse way 253' from DER, 408' right of centerline, 40' MSL.
Building 331' from DER, 215' left of centerline, 16' AGL/32' MSL.
Trees beginning 371' from DER, 514' left of centerline, up to 79' MSL.
Trees beginning 562' from DER, 81' left of centerline, up to 86' MSL.
Trees beginning 612' from DER, 52' right of centerline, up to 76' MSL.
Trees beginning 1408' from DER, 374' right of centerline, up to 80' MSL.
Trees beginning 1735' from DER, 148' right of centerline, up to 90' MSL.
Rwy 13, vegetation 66' from DER, 420' left of centerline, 23' MSL.
Pole 307' from DER, 375' right of centerline, 23' AGL/37' MSL.
Trees, traverse way, and buildings beginning 322' from DER, 233' left of centerline, up to 57' MSL.
Tree 599' from DER, 313' right of centerline, 55' MSL.
Trees beginning 644' from DER, 375' right of centerline, up to 74' MSL.
Trees and traverse way beginning 790' from DER, 38' right of centerline, up to 87' MSL.
Tree 1251' from DER, 467' left of centerline, 63' MSL.
Tree 1360' from DER, 433' left of centerline, 64' MSL.
Rwy 23, pole 132' from DER, 95' right of centerline, 16' AGL/27' MSL.
Traverse way and pole beginning 288' from DER, 8' left of centerline, up to 28' MSL.
Poles beginning 320' from DER, 427' right of centerline, up to 24' AGL/34' MSL.
Tower and transmission line beginning 376' from DER, 201' right of centerline, up to 29' AGL/40' MSL.
Transmission line, sign, and pole beginning 484' from DER, 105' right of centerline, up to 33' AGL/43' MSL.
Transmission line 711' from DER, 142' left of centerline, 21' AGL/31' MSL.
Transmission line beginning 778' from DER, 108' right of centerline, up to 38' AGL/48' MSL.
Transmission line beginning 850' from DER, 659' left of centerline, up to 39' AGL/49' MSL.
Pole and transmission line beginning 1093' from DER, 560' left of centerline, up to 46' AGL/56' MSL.
Tree 1368' from DER, 569' left of centerline, 62' MSL.
Tree 1438' from DER, 78' left of centerline, 69' MSL.
Trees beginning 1721' from DER, 272' left of centerline, up to 70' MSL.
Tree 1817' from DER, 766' left of centerline, 73' MSL.
Tree 2111' from DER, 260' left of centerline, 74' MSL.
Tree 2178' from DER, 514' left of centerline, 75' MSL.
Rwy 31, poles, traverse way, tree beginning 137' from DER, 286' right of centerline, up to 31' AGL/47' MSL.
Tree and poles beginning 229' from DER, 235' left of centerline, up to 88' MSL.
Trees, pole, and bridge beginning 795' from DER, 345' right of centerline, up to 98' MSL.
Tower 2518' from DER, 788' right of centerline, 113' AGL/125' MSL.

SOUTHWEST FLORIDA INTL (RSW)

TAKEOFF MINIMUMS AND (OBSTACLE) DEPARTURE PROCEDURES
AMDT 1 15MAR07 (07074) (FAA)
TAKEOFF OBSTACLE NOTES:
Rwy 6, trees beginning 1398' from DER, 582' left of centerline, up to 84' AGL/104' MSL.
Trees beginning 1763' from DER, 860' right of centerline, up to 95' AGL/115' MSL.
Rwy 24, tree 1692' from DER, 916' right of centerline, 78' AGL/98' MSL.

22 FEB 2024 to 21 MAR 2024
22 FEB 2024 to 21 MAR 2024

FORT PIERCE, FL

TREASURE COAST INTL (FPR)

TAKEOFF MINIMUMS AND (OBSTACLE) DEPARTURE PROCEDURES

AMDT 4A 23JUN16 (16175) (FAA)

TAKEOFF MINIMUMS:

Rwys 10L, 28R, NA-Environmental.

TAKEOFF OBSTACLE NOTES:

Rwy 10R, fence, bush, pole, and trees beginning 24' from DER, 195' left of centerline, up to 79' AGL/133' MSL.
Tower and trees beginning 287' from DER, 265' right of centerline, up to 98' AGL/117' MSL.
Rwy 14, trees beginning 1081' from DER, 528' left of centerline, up to 39' AGL/63' MSL.
Pole and trees beginning 274' from DER, 488' right of centerline, up to 57' AGL/81' MSL.
Rwy 28L, airport sign and trees beginning 41' from DER, 256' left of centerline, up to 72' AGL/91' MSL.
Navaid and trees beginning 40' from DER, 152' right of centerline, up to 58' AGL/77' MSL.
Rwy 32, trees beginning 1344' from DER, 123' left of centerline, up to 62' AGL/86' MSL.
Fence and trees beginning 186' from DER, 153' right of centerline, up to 72' AGL/96' MSL.

GAINESVILLE, FL

GAINESVILLE RGNL (GNV)

TAKEOFF MINIMUMS AND (OBSTACLE) DEPARTURE PROCEDURES

AMDT 1 08JUN06 (06159) (FAA)

TAKEOFF OBSTACLE NOTES:

Rwy 7, multiple trees beginning 1397' from DER, 348' left of centerline, up to 99' AGL/229' MSL.
Multiple trees beginning 1444' from DER, 144' right of centerline, up to 72' AGL/202' MSL.
Rwy 11, multiple trees beginning 653' from DER, 438' right of centerline, up to 30' AGL/134' MSL.
Tree 522' from DER, 402' left of centerline, 18' AGL/122' MSL.
Rwy 25, tower and multiple trees beginning 2415' from DER, 9' left of centerline, up to 126' AGL/291' MSL.
Obstruction light on localizer and multiple trees beginning 208' from DER, 463' right of centerline, up to 82' AGL/243' MSL.
Rwy 29, multiple trees beginning 1279' from DER, 8' right of centerline, up to 76' AGL/233' MSL.
Multiple trees beginning 2679' from DER, 366' left of centerline, up to 88' AGL/240' MSL.

HOLLYWOOD, FL

NORTH PERRY (HWO)

TAKEOFF MINIMUMS AND (OBSTACLE) DEPARTURE PROCEDURES

AMDT 5A 06DEC18 (18340) (FAA)

TAKEOFF MINIMUMS:

Rwys 10L/R, std. w/min. climb of 500' per NM to 1400 or 1400-2½ for climb in visual conditions.
Rwys 19L/R, 400-2¾ or std. w/min. climb of 220' per NM to 500.

DEPARTURE PROCEDURE:

Rwy 1R, climb heading 006° to 900 before turning right.
Rwy 1L, climb heading 006° to 900 before turning right.
Rwys 10L/R, right turn on departure NA.
Rwys 19L/R, climb heading 186° to 1300 before turning left.
Rwys 28L/R, climb heading 276° to 1000 before proceeding on course.

TAKEOFF OBSTACLE NOTES:

Rwy 1R, multiple trees beginning 54' from DER, 215' right of centerline, up to 60' AGL/68' MSL.
Multiple trees beginning 1312' from DER, 85' left of centerline, up to 68' AGL/74' MSL.
Multiple poles beginning 50' from DER, 341' right of centerline up to 62' AGL/68' MSL.
Multiple poles beginning 979' from DER, 646' left of centerline, up to 49' AGL/55' MSL.
Sign 106' from DER, 342' right of centerline, 7' AGL/13' MSL.
Rwy 1L, vehicles on roadway beginning 45' from DER, 322' left of centerline, up to 15' AGL/22' MSL.
Multiple trees beginning 169' from DER, 284' left of centerline up to 31' AGL/39' MSL.
Multiple poles beginning 740' from DER, 376' left of centerline, up to 48' AGL/56' MSL.
Multiple buildings beginning 163' from DER, 375' right of centerline up to 36' AGL/43' MSL.
Multiple poles beginning 765' from DER, 386' right of centerline, up to 48' AGL/55' MSL.
Multiple trees beginning 860' from DER, 2' left of centerline, up to 58' AGL/66' MSL.
Multiple trees beginning 886' from DER, 46' right of centerline, up to 68' AGL/74' MSL.
Crane 3214' from DER, 762' left of centerline, 111' AGL/117' MSL.
Tower 3233' from DER, 1264' left of centerline, up to 150' AGL/158' MSL.

CON'T

22 FEB 2024 to 21 MAR 2024

HOLLYWOOD, FL (CON'T)

NORTH PERRY (CON'T)

Rwy 10R, pole 168' from DER, 543' right of centerline, 31' AGL/38' MSL.
Buildings beginning 541' from DER, 377' right of centerline, up to 25' AGL/33' MSL.
Multiple trees beginning 649' from DER, 20' right of centerline, up to 77' AGL/85' MSL.
Multiple poles beginning 168' from DER, 543' left of centerline, up to 62' AGL/70' MSL.
Multiple trees beginning 847' from DER, 152' left of centerline, up to 76' AGL/84' MSL.
Rwy 10L, fence 113' from DER, 325' left of centerline, 8' AGL/14' MSL.
Multiple trees beginning 272' from DER, 359' left of centerline, up to 39' AGL/46' MSL.
Multiple poles beginning 660' from DER, 515' right of centerline, up to 61' AGL/69' MSL.
Multiple trees beginning 1124' from DER, 67' right of centerline, up to 77' AGL/84' MSL.
Pole 1085' from DER, 450' left of centerline, 40' AGL/47' MSL.
Multiple trees beginning 1100' from DER, 44' left of centerline, up to 72' AGL/80' MSL.
Tower 1.2 NM from DER, 2371' left of centerline, 194' AGL/204' MSL.
Rwy 19L, vehicles on roadway 174' from DER, 222' right of centerline, up to 15' AGL/22' MSL.
Multiple trees beginning 217' from DER, 35' right of centerline, up to 78' AGL/85' MSL.
Multiple trees beginning 369' from DER, 20' left of centerline, up to 75' AGL/82' MSL.
Building 288' from DER, 448' right of centerline, 15' AGL/23' MSL.
Multiple buildings beginning 459' from DER, 478' left of centerline, up to 25' AGL/32' MSL.
Multiple poles beginning 521' from DER, 29' left of centerline, up to 39' AGL/46' MSL.
Multiple poles beginning 848' from DER, 99' right of centerline, up to 35' AGL/41' MSL.
Rwy 19R, multiple poles beginning 843' from DER, 35' right of centerline, up to 36' AGL/43' MSL.
Multiple poles beginning 1070' from DER, 49' left of centerline, up to 36' AGL/43' MSL.
Multiple trees beginning 962' from DER, 24' right of centerline, up to 68' AGL/76' MSL.
Multiple trees beginning 1169' from DER, 165' left of centerline, up to 78' AGL/85' MSL.
Tower 1335' from DER, 211' left of centerline, 68' AGL/74' MSL.
Rwy 28L, tower 911' from DER, 605' right of centerline, 55' AGL/61' MSL.
Multiple poles beginning 978' from DER, 39' right of centerline, up to 72' AGL/80' MSL.
Multiple poles beginning 1115' from DER, 49' left of centerline, up to 39' AGL/48' MSL.
Multiple trees beginning 1259' from DER, 309' left of centerline, up to 82' AGL/90' MSL.
Multiple trees beginning 1309' from DER, 391' right of centerline, up to 104' AGL/112' MSL.
Building 1626' from DER, 29' left of centerline, 60' AGL/69' MSL.
Multiple buildings beginning 1996' from DER, 22' right of centerline, up to 60' AGL/67' MSL.
Rwy 28R, multiple trees beginning 15' from DER, 28' left of centerline, up to 105' AGL/112' MSL.
Multiple trees beginning 17' from DER, 116' right of centerline, up to 82' AGL/90' MSL.
Multiple poles beginning 687' from DER, 38' left of centerline, up to 59' AGL/65' MSL.
Multiple poles beginning 965' from DER, 65' right of centerline, up to 39' AGL/47' MSL.
Building 1804' from DER, 981' left of centerline, 50' AGL/59' MSL.

HOMESTEAD, FL

MIAMI HOMESTEAD GENERAL AVIATION (X51)

TAKEOFF MINIMUMS AND (OBSTACLE) DEPARTURE PROCEDURES

ORIG-B 22JUN17 (17173) (FAA)

DEPARTURE PROCEDURE:
Rwy 36, climb on a heading between 186° CW 046° from DER or minimum climb of 461' per NM to 2500 for headings 047° through 185°.
Rwy 10, climb on a heading between 096° CW 275° from DER or minimum climb of 512' per NM to 2500 for headings 276° through 095°.
Rwy 18, climb heading 185° to 1100 before proceeding North or Northeast.
Rwy 28, climb heading 276° to 1100 before proceeding East or Northeast.

TAKEOFF OBSTACLE NOTES:
Rwy 36, fence 231' from DER, 457' left of centerline, 5' AGL/14' MSL.
Rwy 10, building 170' from DER, 415' right of centerline, 17' AGL/26' MSL.
Rwy 28, light pole 118' from DER, 371' left of centerline, 26' AGL/35' MSL.

HOMESTEAD ARB (KHST)

HOMESTEAD, FL

TAKEOFF MINIMUMS AND (OBSTACLE) DEPARTURE PROCEDURES

AMDT 1 08NOV18 (18312)

DEPARTURE PROCEDURE:
Rwy 6, DER climb on a heading of 340° CW 235° with a std. climb gradient of 200 ft/NM.
Rwy 24, DER climb on a heading of 060° CW 280° with a std. climb gradient of 200 ft/NM.

TAKEOFF OBSTACLE NOTES:
Rwy 6, C-5 tail at hold line taxiway e 20' inward of DER, 527' left of centerline, 65' AGL/70' MSL.
C-5 at hold line taxiway e 32' inward of DER, 271' left of centerline, 65' AGL/70' MSL.
Multiple trees 1697' from DER, 211' right of centerline, 25' AGL/28' MSL.
Multiple trees 2005' from DER, 984' right of centerline, 89' AGL/94' MSL.
Multiple trees 2129' from DER, 223' right of centerline, 32' AGL/38' MSL.
Sign 54' from DER, 310' right of centerline, 5' AGL/8' MSL.
Terrain + multiple trees 3468' from DER, 1336' right of centerline, 89' AGL/94' MSL.
Terrain + multiple trees 3558' from DER, 354' left of centerline, 89' AGL/94' MSL.
Terrain + multiple trees 3562' from DER, 394' right of centerline, 89' AGL/94' MSL.

CON'T

22 FEB 2024 to 21 MAR 2024
22 FEB 2024 to 21 MAR 2024

HOMESTEAD ARB (KHST) (CON'T)

Rwy 24, terrain 0' from DER, 500' left of centerline, 7' MSL.
Multiple trees 2401' from DER, 1143' right of centerline, 52' AGL/62' MSL.
Multiple trees 2481' from DER, 790' right of centerline, 62' AGL/67' MSL.

HURLBURT FLD (KHRT)

MARY ESTHER, FL
TAKEOFF MINIMUMS AND (OBSTACLE)
DEPARTURE PROCEDURES
AMDT 1 18AUG16 (16231)

TAKEOFF OBSTACLE NOTES:
Rwy 36, tree 85' AGL, 3141' from DER, 708' right of centerline.
Tree 70' AGL, 3104' from DER, 1231' right of centerline.
Tree 70' AGL, 3196' from DER, 78' right of centerline.
Tree 70' AGL, 3251' from DER, 864' left of centerline.

IMMOKALEE, FL

IMMOKALEE RGNL (IMM)
TAKEOFF MINIMUMS AND (OBSTACLE) DEPARTURE PROCEDURES
AMDT 2A 13SEP18 (18256) (FAA)

TAKEOFF MINIMUMS:
Rwy 18, 300-2¼ or std. w/min. climb of 230' per NM to 420, or alternatively, with std. takeoff minimums and a normal 200' per NM climb gradient, takeoff must occur no later than 2200' prior to DER.

TAKEOFF OBSTACLE NOTES:
Rwy 9, tree 58' from DER, 445' left of centerline, 46' MSL.
Trees beginning 166' from DER, 408' left of centerline, up to 47' MSL.
Tree 1129' from DER, 299' left of centerline, 37' AGL/67' MSL.
Rwy 18, aprt sign, REIL beginning 27' from DER, 116' left of centerline, up to 2' AGL/34' MSL.
REIL 38' from DER, 115' right of centerline, 1' AGL/34' MSL.
Buildings beginning 253' from DER, 475' left of centerline, up to 51' MSL.
Tree 1180' from DER, 767' left of centerline, 63' MSL.
Tree 1242' from DER, 620' left of centerline, 66' MSL.
Tree 1309' from DER, 814' left of centerline, 69' MSL.
Tower 1.7 NM from DER, 2983' right of centerline, 297' AGL/322' MSL.
Communication twr 1.7 NM from DER, 2996' right of centerline, 285' AGL/311' MSL.
Rwy 27, fence 4' from DER, 472' right of centerline, 7' AGL/41' MSL.
Aprt sign 33' from DER, 467' left of centerline, 3' AGL/38' MSL.
Tree 231' from DER, 486' right of centerline, 60' MSL.
Tree 308' from DER, 425' right of centerline, 61' MSL.
Trees beginning 393' from DER, 340' right of centerline, up to 63' MSL.
Trees beginning 505' from DER, 286' right of centerline, up to 30' AGL/68' MSL.
Tree 719' from DER, 624' left of centerline, 45' AGL/80' MSL.
Tree 769' from DER, 527' left of centerline, 81' MSL.
Tree, pole beginning 870' from DER, 258' left of centerline, up to 54' AGL/89' MSL.
Tree 967' from DER, 363' right of centerline, 33' AGL/70' MSL.
Pole 1029' from DER, 670' right of centerline, 71' MSL.
Tree, pole beginning 1053' from DER, 49' right of centerline, up to 45' AGL/76' MSL.
Rwy 36, trees beginning 265' from DER, 383' left of centerline, up to 63' MSL.
Trees beginning 355' from DER, 306' left of centerline, up to 30' AGL/68' MSL.
Tree 400' from DER, 232' right of centerline, 16' AGL/51' MSL.
Trees beginning 446' from DER, 209' right of centerline, up to 18' AGL/53' MSL.

INVERNESS, FL

INVERNESS (INF)
TAKEOFF MINIMUMS AND (OBSTACLE) DEPARTURE PROCEDURES
ORIG 05APR12 (12096) (FAA)

TAKEOFF MINIMUMS:
Rwy 1, 300-1½ or std. w/min. climb of 420' per NM to 500.

TAKEOFF OBSTACLE NOTES:
Rwy 1, terrain beginning 110' from DER, 27' left of centerline, up to 49' MSL.
Terrain beginning 137' from DER, 238' right of centerline, up to 49' MSL.
Trees beginning 110' from DER, 293' left of centerline, up to 100' AGL/149' MSL.
Vehicles on roadway 598' from DER, across centerline, up to 15' AGL/65' MSL.
Trees beginning 785' from DER, on centerline, up to 100' AGL/149' MSL.
Tower 5479' from DER, 1312' left of centerline, up to 220' AGL/279' MSL.
Tower 5764' from DER, 1596' left of centerline, up to 164' AGL/250' MSL.
Trees beginning 164' from DER, 238' right of centerline, up to 100' AGL/149' MSL.
Rwy 19, trees beginning 340' from DER, 239' left of centerline, up to 100' AGL/169' MSL.
Trees beginning 793' from DER, 596' right of centerline, up to 100' AGL/189' MSL.
Trees beginning 2066' from DER, on centerline, up to 100' AGL/209' MSL.
Trees beginning 2523' from DER, 274' right of centerline, up to 100' AGL/209' MSL.

ISLA DE VIEQUES, PR

ANTONIO RIVERA RODRIGUEZ (VQS) (TJVQ)

TAKEOFF MINIMUMS AND (OBSTACLE) DEPARTURE PROCEDURES

AMDT 2A 10SEP20 (21280) (FAA)

TAKEOFF MINIMUMS:

Rwy 9, 500-2¼ w/min. climb of 260' per NM to 900 or 1600-2½ for climb in visual conditions.

Rwy 27, 500-2½ w/min. climb of 280' per NM to 2700 or 1600-2½ for climb in visual conditions.

DEPARTURE PROCEDURE:

Rwy 9, climb on heading 090° to 900 before proceeding on course.

Rwy 27, climb on heading 270° to 2900 before proceeding on course.

VCOA:

Rwys 9, 27, obtain ATC approval for VCOA when requesting IFR clearance. Climb in visual conditions to cross Antonio Rivera Rodriquez airport at or above 1500 before proceeding on course.

TAKEOFF OBSTACLE NOTES:

Rwy 9, vehicles on roadway beginning 26' from DER, left and right of centerline, up to 15' AGL/80' MSL.
Trees beginning 70' from DER, 504' right of centerline, up to 100' AGL/165' MSL.
Trees beginning 579' from DER, on centerline, up to 100' AGL/165' MSL.
Trees beginning 1750' from DER, 956' right of centerline up to 100' AGL/493' MSL.
Rwy 27, trees beginning 15' from DER, 225' left of centerline, up to 100' AGL/165' MSL.
Trees beginning 16' from DER, 274' right of centerline up to 100' AGL/165' MSL.
Trees beginning 186' from DER, left and right of centerline, up to 100' AGL/165' MSL.
Trees beginning 1206' from DER, 794' left of centerline, up to 100' AGL/493' MSL.

JACKSONVILLE, FL

CECIL (VQQ)

TAKEOFF MINIMUMS AND (OBSTACLE) DEPARTURE PROCEDURES

ORIG 05JUL07 (07186) (FAA)

TAKEOFF OBSTACLE NOTES:

Rwy 18L, tree 1499' from DER, 699' right of centerline, 34' AGL/113' MSL.

HERLONG RECREATIONAL (HEG)

TAKEOFF MINIMUMS AND (OBSTACLE) DEPARTURE PROCEDURES

AMDT 2 05APR12 (12096) (FAA)

DEPARTURE PROCEDURE:

Rwy 7, climb heading 071° to 800 before turning right.

Rwy 11, climb heading 116° to 700 before turning left.

TAKEOFF OBSTACLE NOTES:

Rwy 7, trees beginning 236 ' from DER, 53' right of centerline, up to 100' AGL/184' MSL.
Trees beginning 376' from DER, 237' left of centerline, up to 100' AGL/179' MSL.
Rwy 11, trees beginning 18' from DER, 70' left of centerline, up to 100' AGL/184' MSL.
Trees beginning 163' from DER, 77' right of centerline, up to 100' AGL/184' MSL.
Rwy 25, trees beginning 436' from DER, 433' right of centerline, up to 100' AGL/174' MSL.
Trees beginning 1363' from DER, 355' left of centerline, up 100' AGL/174' MSL.
Rwy 29, trees beginning 1491' from DER, 178' right of centerline, up to 100' AGL/184' MSL.
Trees beginning 1872' from DER, 64' left of centerline, up to 100' AGL/179' MSL.

JACKSONVILLE EXEC AT CRAIG (CRG)

TAKEOFF MINIMUMS AND (OBSTACLE) DEPARTURE PROCEDURES

AMDT 4 07MAR13 (21168) (FAA)

TAKEOFF MINIMUMS:

Rwy 23, std. w/min. climb of 360' per NM to 1500 or 1300-2½ for climb in visual conditions.

DEPARTURE PROCEDURE:

Rwy 23, for climb in visual conditions: cross Jacksonville Exec at Craig airport at or above 1200 before proceeding on course. When executing VCOA, notify ATC prior to departure.

Rwy 5, climb heading 051° to 500 before proceeding on course.

Rwy 14, climb heading 141° to 700 before turning right.

TAKEOFF OBSTACLE NOTES:

Rwy 5, trees beginning 1617' from DER, 182' right of centerline, up to 100' AGL/143' MSL.
Terrain beginning 17' from DER, beginning 179' left and right of centerline, 9' MSL.
Trees beginning 1911' from DER, 113' left of centerline, up to 100' AGL/143' MSL.
Pole and navaid beginning 571' from DER, 560' left of centerline, up to 41' AGL/82' MSL.
Rwy 14, tree 2375' from DER, 905' right of centerline, 100' AGL/119' MSL.
Terrain beginning 5' from DER, beginning 44' right and left of centerline, 56' MSL.
Trees beginning 1848' from DER, 610' left of centerline, up to 100' AGL/128' MSL.
Rwy 23, trees beginning 1601' from DER, 15' right of centerline, up to 100' AGL/119' MSL.
Terrain beginning 9' from DER, beginning 278' left and right of centerline, 53' MSL.
Trees beginning 519' from DER, 510' left of centerline, up to 100' AGL/133' MSL.
Pole 1994' from DER, 580' left of centerline, 47' AGL/85' MSL.
Rwy 32, trees beginning 494' from DER, 104' right of centerline, up to 67' AGL/99' MSL.
Building 501' from DER, 251' right of centerline, 16' AGL/52' MSL.
Terrain beginning 117' from DER, beginning 51' left and right of centerline, 50' MSL.
Trees and bushes beginning 218' from DER, 222' left of centerline, up to 100' AGL/101' MSL.

JACKSONVILLE, FL (CON'T)

JACKSONVILLE INTL (JAX)

TAKEOFF MINIMUMS AND (OBSTACLE) DEPARTURE PROCEDURES

AMDT 2 30JAN20 (20030) (FAA)

TAKEOFF OBSTACLE NOTES:

Rwy 8, poles beginning 10' from DER, right and left of centerline, 1' AGL/28' MSL.
Bushes beginning 82' from DER, 261' right of centerline, 30' MSL.
Trees beginning 768' from DER, 504' right of centerline, 65' MSL.
Trees beginning 2210' from DER, 680' right of centerline, up to 85' AGL/127' MSL.
Trees beginning 3378' from DER, 208' left of centerline, 97' AGL/115' MSL.
Tree 3786' from DER, 1031' right of centerline, 115' AGL/134' MSL.
Rwy 14, lighting 39' from DER, left and right of centerline, 4' AGL/26' MSL.
Sign, electrical system beginning 76' from DER, 292' left of centerline, up to 5' AGL/27' MSL.
Pole 754' from DER, 699' left of centerline, 30' AGL/52' MSL.
Trees beginning 899' from DER, 102' right of centerline, up to 89' AGL/121' MSL.
Tree 1761' from DER, 783' left of centerline, 97' MSL.
Trees beginning 2065' from DER, 808' left of centerline, up to 105' MSL.
Trees beginning 2635' from DER, 158' left of centerline, up to 128' MSL.
Trees beginning 3376' from DER, 4' left of centerline, up to 130' MSL.
Rwy 26, trees beginning 2195' from DER, 722' right of centerline, up to 81' AGL/104' MSL.
Tree 3533' from DER, 794' left of centerline, 120' MSL.
Rwy 32, sign 39' from DER, 442' right of centerline, 5' AGL/30' MSL.
Trees beginning 2225' from DER, 640' right of centerline, up to 93' AGL/110' MSL.
Trees beginning 2773' from DER, left and right of centerline, up to 100' AGL/115' MSL.

JACKSONVILLE NAS (TOWERS FIELD) (KNIP)

JACKSONVILLE, FL

TAKEOFF MINIMUMS AND (OBSTACLE) DEPARTURE PROCEDURES

AMDT 4 03NOV22 (22307) (USN)

DEPARTURE PROCEDURE:

Rwy 10, diverse departures only between 096° through 275° CW.
Rwy 14, diverse departures only between 095° through 320° CW.
Rwy 28, diverse departures authorized.
Rwy 32, diverse departures only between 141° through 351° CW.

TAKEOFF OBSTACLE NOTES:

Rwy 10, terrain 0' from DER, 500' left of centerline, 30' MSL.
Terrain 300' from DER, 580' left of centerline, 30' MSL.
Windsock 341' from DER, 511' right of centerline, 26' MSL.
Windsock 383' from DER, 501' right of centerline, 15' AGL/20' MSL.
Rwy 14, terrain 0' from DER, 500' right of centerline, 37' MSL.
Windsock 629' DER, 276' left of centerline, 26' MSL.
Rwy 28, terrain 0' from DER, 25' right of centerline, 36' MSL.
Rwy 32, terrain 0' from DER, 500' right of centerline, 30' MSL.
Terrain 427' from DER, 614' left of centerline, 30' MSL.
Trees 4772' from DER, 322' left of centerline, 130' MSL.

KEY WEST, FL

KEY WEST INTL (EYW)

TAKEOFF MINIMUMS AND (OBSTACLE) DEPARTURE PROCEDURES

AMDT 1 08JUN06 (06159) (FAA)

DEPARTURE PROCEDURE:

Rwys 9, 27, climb on a heading between 087° clockwise to 033° from DER to avoid R-2916 and unmarked tethered balloon up to 14000 MSL.

TAKEOFF OBSTACLE NOTES:

Rwy 9, rod on antenna, dome on building, poles, and numerous trees beginning 38' from DER, 199' right of centerline, up to 75' AGL/82' MSL.
Obstruction light on building, pole, and numerous trees beginning 4' from DER, 220' left of centerline, up to 38' AGL/45' MSL.
Rwy 27, pole and numerous trees beginning 27' from DER, 116' right of centerline, up to 83' AGL/90' MSL. Numerous bushes and trees beginning 202' from DER, 78' left of centerline, up to 37' AGL/44' MSL.

KEY WEST NAS (BOCA CHICA FLD) (KNQX)

KEY WEST, FL

TAKEOFF MINIMUMS AND (OBSTACLE) DEPARTURE PROCEDURES

AMDT 4 23FEB23 (23054) (USN)

DEPARTURE PROCEDURE:

Rwy 4, diverse departures authorized between 218° CW 017°. Left turn to departure hdg only.
Rwy 8, diverse departures authorized 100° CW 259°.
Rwy 14, diverse departures authorized 084° CW 315°.
Rwy 22, diverse departures authorized 084° CW 035°.
Rwy 26, diverse departures authorized 084° CW 315°.
Rwy 32, diverse departures authorized 137° CW 035°.

TAKEOFF OBSTACLE NOTES:

Rwy 4, pylon 2471' from DER, 1131' left of centerline, 78' AGL/78' MSL.
Pylon 2661' from DER, 908' left of centerline, 78' AGL/78' MSL.
Pylon 2812' from DER, 696' left of centerline, 78' AGL/81' MSL.
Pylon 2933' from DER, 527' left of centerline, 78' AGL/81' MSL.
Rwy 32, twr 1485' from DER, 497' right of centerline, 50' AGL/41' MSL.
Twr 1690' from DER, 446' right of centerline, 57' AGL/51' MSL.
Twr 1708' from DER, 717' right of centerline, 57' AGL/57' MSL.
Twr 1783' from DER, 528' right of centerline, 57' AGL/57' MSL.
Twr 1790' from DER, 627' right of centerline, 57' AGL/57' MSL.

KEYSTONE HEIGHTS, FL

KEYSTONE HEIGHTS (42J)

TAKEOFF MINIMUMS AND (OBSTACLE) DEPARTURE PROCEDURES

ORIG-A 16JUL20 (20198) (FAA)

TAKEOFF OBSTACLE NOTES:

Rwy 5, trees beginning 363' from DER, 503' left of centerline, up to 100' AGL/309' MSL.
Trees beginning 1165' from DER, 331' right of centerline, up to 100' AGL/309' MSL.
Rwy 11, trees beginning 995' from DER, on centerline, up to 100' AGL/309' MSL.
Rwy 23, trees beginning 375' from DER, on centerline, up to 100' AGL/270' MSL.
Powerlines beginning 2436' from DER, 24' right of centerline, up to 100' AGL/279' MSL.
Rwy 29, trees beginning 0' from DER, 263' right of centerline, up to 100' AGL/289' MSL.
Trees beginning 563' from DER, on centerline, up to 100' AGL/290' MSL.
Powerlines beginning 3048' from DER, 122' left of centerline, up to 100' AGL/280' MSL.

LA BELLE, FL

LA BELLE MUNI (X14)

TAKEOFF MINIMUMS AND (OBSTACLE) DEPARTURE PROCEDURES

ORIG 14FEB08 (08045) (FAA)

TAKEOFF OBSTACLE NOTES:

Rwy 14, vehicles on roadway, beginning 98' from DER, 483' left of centerline, up to 15' AGL/39' MSL.
Trees beginning 70' from DER, 357' right of centerline, up to 100' AGL/124' MSL.
Poles and trees beginning 305' from DER, 157' left of centerline, up to 40' AGL/94' MSL.
Building 562' from DER, 238' left of centerline, 14' AGL/38' MSL.
Poles and trees beginning 745' from DER, 93' right of centerline, up to 40' AGL/60' MSL.
Rwy 32, airplanes on taxiway beginning 18' from DER, 130' left of centerline, up to 12' AGL/31' MSL.
Trees beginning 35' from DER, 135' right of centerline, up to 100' AGL/119' MSL.
Trees beginning 61' from DER, 6' left of centerline, up to 100' AGL/119' MSL.
Vehicle on roadway beginning 136' from DER, 450' right of centerline, up to 15' AGL/34' MSL.
Building 446' from DER, 214' right of centerline, 18' AGL/37' MSL.
Pole 1578' from DER, 789' left of centerline, 43' AGL/62' MSL.

LAKE CITY, FL

LAKE CITY GATEWAY (LCQ)

TAKEOFF MINIMUMS AND (OBSTACLE) DEPARTURE PROCEDURES

AMDT 1 29MAY14 (14149) (FAA)

TAKEOFF OBSTACLE NOTES:

Rwy 5, trees beginning 1358' from DER, 522' right of centerline, up to 100' AGL/294' MSL.
Rwy 10, trees beginning 2490' from DER, 32' right of centerline, up to 94' AGL/284' MSL.
Trees beginning 84' from DER, 58' left of centerline, up to 83' AGL/273' MSL.
Rwy 23, trees beginning 575' from DER, 363' right of centerline, up to 100' AGL/285' MSL.
Trees beginning 1139' from DER, 88' left of centerline, up to 100' AGL/285' MSL.
Rwy 28, trees, pole and tower beginning 1001' from DER, 23' right of centerline, up to 158' AGL/350' MSL.
Trees beginning 981' from DER, 4' left of centerline, up to 94' AGL/292' MSL.

LAKE WALES, FL

LAKE WALES MUNI (X07)

TAKEOFF MINIMUMS AND (OBSTACLE) DEPARTURE PROCEDURES

AMDT 1 02DEC21 (21336) (FAA)

TAKEOFF OBSTACLE NOTES:

Rwy 6, vegetation, sign beginning 15' from DER, 200' left of centerline, up to 125' MSL.
Tree 39' from DER, 254' right of centerline, 126' MSL.
Trees, vegetation beginning 66' from DER, 14' left of centerline, up to 149' MSL.
Trees beginning 69' from DER, 16' right of centerline, up to 27' AGL/144' MSL.
Pole 939' from DER, 551' right of centerline, 32' AGL/146' MSL.
Pole 1012' from DER, 274' right of centerline, 34' AGL/147' MSL.
Tree 1216' from DER, 637' left of centerline, 39' AGL/154' MSL.
Tree 1240' from DER, 703' left of centerline, 162' MSL.
Trees beginning 1246' from DER, 690' left of centerline, up to 51' AGL/166' MSL.
Tree 1336' from DER, 808' left of centerline, 170' MSL.
Trees beginning 1344' from DER, 574' left of centerline, up to 177' MSL.
Trees beginning 1455' from DER, 544' left of centerline, up to 60' AGL/179' MSL.
Trees beginning 1663' from DER, 681' left of centerline, up to 57' AGL/183' MSL.
Trees beginning 1718' from DER, 23' left of centerline, up to 62' AGL/185' MSL.
Trees beginning 1761' from DER, 50' left of centerline, up to 72' AGL/189' MSL.
Poles beginning 2679' from DER, 606' left of centerline, up to 205' MSL.
Tree 3240' from DER, 1330' right of centerline, 204' MSL.
Antenna 3918' from DER, 476' right of centerline, 90' AGL/225' MSL.
Rwy 17, tree 36' from DER, 259' left of centerline, 132' MSL.
Trees, vegetation beginning 41' from DER, 262' right of centerline, up to 133' MSL.
Tree 90' from DER, 259' left of centerline, 136' MSL.
Tree 251' from DER, 226' right of centerline, 136' MSL.
Tree 572' from DER, 617' right of centerline, 139' MSL.
Trees beginning 627' from DER, 527' right of centerline, up to 148' MSL.
Rwy 24, tree 565' from DER, 384' left of centerline, 28' AGL/153' MSL.
Tree 1044' from DER, 729' right of centerline, 34' AGL/151' MSL.
Trees beginning 1060' from DER, 374' right of centerline, up to 55' AGL/172' MSL.
Tree 1101' from DER, 438' right of centerline, 59' AGL/175' MSL.
Trees beginning 1102' from DER, 25' right of centerline, up to 59' AGL/176' MSL.
Tree 1218' from DER, 482' left of centerline, 38' AGL/157' MSL.
Tree 1561' from DER, 8' left of centerline, 46' AGL/163' MSL.
Trees beginning 1564' from DER, 34' left of centerline, up to 52' AGL/173' MSL.
Rwy 35, tree 9' from DER, 257' left of centerline, 154' MSL.
Building 29' from DER, 398' right of centerline, 133' MSL.
Tree 43' from DER, 338' left of centerline, 171' MSL.
Building 52' from DER, 265' right of centerline, 135' MSL.
Trees beginning 54' from DER, 254' left of centerline, up to 173' MSL.
Buildings beginning 65' from DER, 235' right of centerline, up to 145' MSL.
Tree 113' from DER, 434' right of centerline, 154' MSL.
Trees, poles beginning 114' from DER, 96' right of centerline, up to 163' MSL.
Trees beginning 123' from DER, 236' left of centerline, up to 181' MSL.
Trees beginning 228' from DER, 86' left of centerline, up to 186' MSL.
Trees, building, poles, spire beginning 381' from DER, 3' left of centerline, up to 188' MSL.
Trees beginning 859' from DER, 314' right of centerline, up to 164' MSL.
Trees, pole beginning 891' from DER, 107' right of centerline, up to 167' MSL.
Trees, poles, building beginning 1011' from DER, 169' right of centerline, up to 170' MSL.
Tree 1369' from DER, 359' right of centerline, 172' MSL.
Poles, trees beginning 1380' from DER, 10' right of centerline, up to 191' MSL.
Trees beginning 1719' from DER, 31' left of centerline, up to 193' MSL.
Tree 2829' from DER, 476' right of centerline, 202' MSL.

LAKELAND, FL

LAKELAND LINDER INTL (LAL)

TAKEOFF MINIMUMS AND (OBSTACLE) DEPARTURE PROCEDURES

AMDT 1C 07OCT21 (21280) (FAA)

TAKEOFF MINIMUMS:

Rwys 8, 26, NA-Environmental.

TAKEOFF OBSTACLE NOTES:

Rwy 5, trees beginning 719' from DER, 343' right of centerline, up to 182' MSL.
Poles beginning 1099' from DER, 580' left of centerline, up to 33' AGL/174' MSL.
Pole, tree beginning 1143' from DER, 48' right of centerline, up to 42' AGL/185' MSL.
Tree, pole beginning 1260' from DER, 475' left of centerline, up to 175' MSL.
Tree 1444' from DER, 437' right of centerline, 191' MSL.
Tree 1546' from DER, 427' left of centerline, 180' MSL.
Building 1850' from DER, 69' left of centerline, 45' AGL/196' MSL.
Crane 2166' from DER, 751' left of centerline, 100' AGL/244' MSL.
Rwy 10, tree 2520' from DER, 258' right of centerline, 206' MSL.
Tree 2550' from DER, 583' left of centerline, 210' MSL.
Tree 2673' from DER, 526' right of centerline, 212' MSL.

22 FEB 2024 to 21 MAR 2024
22 FEB 2024 to 21 MAR 2024

LEESBURG, FL

LEESBURG INTL (LEE)

TAKEOFF MINIMUMS AND (OBSTACLE) DEPARTURE PROCEDURES

AMDT 5A 07SEP23 (23250) (FAA)

TAKEOFF MINIMUMS:

Rwys 3W, 21W, NA-Environmental.

Rwy 4, 400-2¼ or std w/min climb of 227'/NM to 500 or alternatively, with std takeoff minimums and a normal 200'/NM climb gradient, takeoff must occur no later than 2100' prior to DER.

TAKEOFF OBSTACLE NOTES:

Rwy 4, terrain 34' from DER, 281' right of centerline, 78' MSL.
Tree, fence beginning 58' from DER, on centerline, up to 123' MSL.
Terrain 58' from DER, 68' left of centerline, 86' MSL.
Vehicles on road beginning 64' from DER, 211' left of centerline, up to 93' MSL.
Pole, vehicles on road, sign beginning 133' from DER, 4' left of centerline, up to 20' AGL/99' MSL.
Tree, vehicles on road, pole, sign beginning 180' from DER, 108' right of centerline, up to 125' MSL.
Tree, pole beginning 245' from DER, 384' left of centerline, up to 108' MSL.
Tree, pole, sign, building beginning 271' from DER, 90' left of centerline, up to 120' MSL.
Trees beginning 520' from DER, 207' right of centerline, up to 133' MSL.
Tree 574' from DER, 516' left of centerline, 150' MSL.
Tree, pole beginning 586' from DER, 184' left of centerline, up to 154' MSL.
Tree, pole beginning 838' from DER, 202' right of centerline, up to 139' MSL.
Antenna 1.7 NM from DER, 2783' left of centerline, 307' AGL/381' MSL.
Tower 1.7 NM from DER, 2783' left of centerline, 309' AGL/385' MSL.
Rwy 13, trees, 2' from DER, 9' right of centerline, up to 137' MSL.
Trees, sign beginning 20' from DER, 250' left of centerline, up to 117' MSL.
Trees beginning 150' from DER, 87' left of centerline, up to 137' MSL.
Trees beginning 314' from DER, 32' left of centerline, up to 142' MSL.
Rwy 22, trees, sign, vehicles on road beginning 3' from DER, 129' left of centerline, up to 113' MSL.
Trees beginning 13' from DER, 20' right of centerline, up to 102' MSL.
Trees beginning 172' from DER, 26' left of centerline, up to 121' MSL.
Trees beginning 436' from DER, 22' left of centerline, up to 126' MSL.
Trees beginning 688' from DER, 13' left of centerline, up to 170' MSL.
Trees beginning 786' from DER, 202' left of centerline, up to 172' MSL.
Trees beginning 936' from DER, 10' left of centerline, up to 182' MSL.
Tree 3110' from DER, 22' right of centerline, 151' MSL.
Tree 3271' from DER, 31' right of centerline, 160' MSL.
Tree 3527' from DER, 133' right of centerline, 167' MSL.
Trees beginning 3614' from DER, 125' right of centerline, up to 173' MSL.
Rwy 31, trees beginning 46' from DER, 290' left of centerline, up to 137' MSL.
Fences 156' from DER, 467' right of centerline, 7' AGL/84' MSL.
Fences 337' from DER, 460' right of centerline, 9' AGL/86' MSL.
Trees beginning 405' from DER, 268' left of centerline, up to 139' MSL.
Trees 413' from DER, 576' right of centerline, 116' MSL.
Trees, pole, building beginning 519' from DER, 287' right of centerline, up to 128' MSL.
Trees, building beginning 1408' from DER, 6' left of centerline, up to 143' MSL.
Trees beginning 1425' from DER, 341' right of centerline, up to 139' MSL.
Trees 1506' from DER, 546' right of centerline, 153' MSL.
Trees 1519' from DER, 789' right of centerline, 155' MSL.
Trees, pole beginning 1560' from DER, 26' right of centerline, up to 160' MSL.
Trees, building beginning 1789' from DER, 85' right of centerline, up to 165' MSL.
Trees beginning 1848' from DER, 128' right of centerline, up to 172' MSL.
Trees, pole, transmission line beginning 1898' from DER, 10' right of centerline, up to 182' MSL.
Trees, pole, transmission line beginning 2358' from DER, 4' left of centerline, up to 160' MSL.
Transmission lines 3761' from DER, 1248' left of centerline, 111' AGL/201' MSL.

LIVE OAK, FL

SUWANNEE COUNTY (24J)

TAKEOFF MINIMUMS AND (OBSTACLE) DEPARTURE PROCEDURES

ORIG 12DEC13 (13346) (FAA)

DEPARTURE PROCEDURE:

Rwy 7, Climb heading 074° to 600 before turning right.

TAKEOFF OBSTACLE NOTES:

Rwy 7, REILs, fence and taxiway sign beginning 21' from DER, left and right of centerline, up to 5' AGL/106' MSL.
Tree 53' from DER, 438' left of centerline, 50' AGL/152' MSL.
Building and pole beginning 123' from DER, 448' left of centerline, up to 21' AGL/126' MSL.
Trees beginning 189' from DER, 237' right of centerline, up to 18' AGL/106' MSL.
Poles beginning 334' from DER, 484' left of centerline, up to 13' AGL/118' MSL.
Trees beginning 420' from DER, 398' left of centerline, up to 71' AGL/173' MSL.
Trees beginning 1041' from DER, 25' left of centerline, up to 66' AGL/179' MSL.
Trees beginning 1340' from DER, 4' right of centerline, up to 61' AGL/170' MSL.
Trees beginning 2643' from DER, 820' right of centerline, up to 70' AGL/179' MSL.

CON'T

22 FEB 2024 to 21 MAR 2024
22 FEB 2024 to 21 MAR 2024

LIVE OAK, FL (CON'T)

SUWANNEE COUNTY (24J) (CON'T)

Rwy 25, REILs beginning 20' from DER, left and right of centerline, 103' MSL.
Trees and pole beginning 104' from DER, 230' left of centerline, up to 84' AGL/193' MSL.
Tree 452' from DER, 489' right of centerline, 39' AGL/141' MSL.
Trees beginning 1070' from DER, 445' right of centerline, up to 60' AGL/165' MSL.
Trees beginning 1079' from DER, 416' left of centerline, up to 74' AGL/187' MSL.
Trees beginning 1507' from DER, left and right of centerline, up to 83' AGL/195' MSL.

MARATHON, FL

THE FLORIDA KEYS MARATHON INTL AIRPORT (MTH)

TAKEOFF MINIMUMS AND (OBSTACLE) DEPARTURE PROCEDURES

AMDT 1C 31MAR16 (16091) (FAA)

DEPARTURE PROCEDURE:

Rwy 7, climbing right turn direct MTH NDB then via 307° bearing from MTH NDB to TIGAR INT before proceeding on course.

Rwy 25, climb direct MTH NDB then via 307° bearing from MTH NDB to TIGAR INT before proceeding on course.

TAKEOFF OBSTACLE NOTES:

Rwy 7, trees beginning 337' from DER, 324' right of centerline, up to 74' AGL/81' MSL.
Bush 166' from DER, 323' right of centerline, 9' AGL/16' MSL.
Pole 726' from DER, 589' right of centerline, 39' AGL/46' MSL.
Rod on obstruction light 1404' from DER, 655' right of centerline, 55' AGL/62' MSL.
Transmission pole 2360' from DER, 1029' right of centerline, 89' AGL/96' MSL.
Rod on obstruction light antenna 3366' from DER, 1010' right of centerline, 136' AGL/143' MSL.
Antenna 3270' from DER, 1253' right of centerline, 121' AGL/128' MSL.
Tower 3427' from DER, 1033' right of centerline, 115' AGL/121' MSL.
Trees beginning 242' from DER, 99' left of centerline, up to 75' AGL/82' MSL.
Antennas 1660' from DER, 371' left of centerline, up to 86' AGL/93' MSL.
Pole 876' from DER, 468' left of centerline, 39' AGL/46' MSL.
Concrete pole 1391' from DER, 534' left of centerline, 51' AGL/58' MSL.
Pole 1441' from DER, 586' right of centerline, 55' AGL/62' MSL.

Rwy 25, trees beginning 122' from DER, 224' right of centerline, up to 65' AGL/72' MSL.
Poles beginning 702' from DER, 470' right of centerline, up to 37' AGL/44' MSL.
Antenna 1752' from DER, 135' right of centerline, 49' AGL/56' MSL.
Trees beginning 223' from DER, 324' left of centerline, up to 66' AGL/73' MSL.
Rod on obstruction light antenna beginning 2353' from DER, 22' right of centerline, up to 138' AGL/145' MSL.
Antenna 2953' from DER, 745' left of centerline, 75' AGL/82' MSL.
Transmission pole 1545' from DER, 693' left of centerline, 60' AGL/67' MSL.
Monopole 3997' from DER, 660' left of centerline, 136' AGL/140 MSL.

MARCO ISLAND, FL

MARCO ISLAND EXEC (MKY)

TAKEOFF MINIMUMS AND (OBSTACLE) DEPARTURE PROCEDURES

AMDT 3 03JAN19 (21168) (FAA)

DEPARTURE PROCEDURE:

Rwy 35, climb heading 005° to 700 before turning west.

TAKEOFF OBSTACLE NOTES:

Rwy 17, tree 16' from DER, 478' right of centerline, 12' MSL.
Trees beginning 20' from DER, 265' left of centerline, up to 13' MSL.
Pole and tree beginning 77' from DER, 309' right of centerline, up to 25' AGL/25' MSL.
Trees beginning 186' from DER, 431' left of centerline, up to 28' MSL.
Trees beginning 473' from DER, 5' left of centerline, up to 32' MSL.
Tree 689' from DER, 582' right of centerline, 26' MSL.
Trees beginning 826' from DER, on centerline, up to 30' MSL.
Trees beginning 951' from DER, 265' left of centerline, up to 35' MSL.
Trees beginning 972' from DER, 270' right of centerline, up to 36' MSL.
Tree 1106' from DER, 702' right of centerline, 38' MSL.
Tree 1113' from DER, 321' left of centerline, 36' MSL.
Trees beginning 1154' from DER, 249' left of centerline, up to 39' MSL.
Trees beginning 1246' from DER, 499' left of centerline, up to 47' MSL.
Tree 1303' from DER, 394' right of centerline, 39' MSL.
Tree 1354' from DER, 658' right of centerline, 43' MSL.
Trees beginning 1396' from DER, 98' right of centerline, up to 48' MSL.
Trees beginning 1476' from DER, 239' right of centerline, up to 50' MSL.

Rwy 35, tower, sign and tree beginning 10' from DER, 31' left of centerline, up to 56' AGL/57' MSL.
Trees beginning 178' from DER, 51' right of centerline, up to 43' MSL.
Tree 1568' from DER, 795' right of centerline, 45' MSL.
Tree 1895' from DER, 337' right of centerline, 58' MSL.

MARIANNA, FL
MARIANNA MUNI (MAI)
TAKEOFF MINIMUMS AND (OBSTACLE) DEPARTURE PROCEDURES
ORIG 12MAR09 (09071) (FAA)
TAKEOFF MINIMUMS:
Rwy 18, 300-1½ or std. w/ min. climb of 222' per NM to 400.
TAKEOFF OBSTACLE NOTES:
Rwy 8, trees beginning 2518' from DER, 1016' right of centerline, up to 100' AGL/219' MSL.
Rwy 18, trees beginning 57' from DER, 275' right of centerline, up to 100' AGL/279' MSL.
Trees beginning 1241' from DER, 366' left of centerline, up to 100' AGL/209' MSL.
Rwy 26, trees beginning 3180' from DER, 1278' right of centerline, up to 100' AGL/209' MSL.
Rwy 36, trees beginning 2230' from DER, 1003' left of centerline, up to 100' AGL/209' MSL.
Trees beginning 2352' from DER, 1007' right of centerline, up to 100' AGL/209' MSL.

MAYAGUEZ, PR
EUGENIO MARIA DE HOSTOS (MAZ) (TJMZ)
TAKEOFF MINIMUMS AND (OBSTACLE) DEPARTURE PROCEDURES
AMDT 3 15OCT92 (21280) (FAA)
TAKEOFF MINIMUMS:
Rwy 9, 1400-3 or std. with a min. climb of 500' per NM to 1400.
DEPARTURE PROCEDURE:
Rwy 9, climb via MAZ R-083 to 2500, aircraft northeast bound on G633 continue climb on course. All others turn left direct MAZ VOR/DME before proceeding on course.
Rwy 27, climb via MAZ R-277 to 1500. Aircraft westbound on G633 continue climb on course. All others climbing right turn direct MAZ VOR/DME so as to cross at or above MEA for direction of flight.

MAYPORT NS (ADM DAVID L. MC DONALD FLD) (KNRB)
MAYPORT, FL
TAKEOFF MINIMUMS AND (OBSTACLE) DEPARTURE PROCEDURES
AMDT 2 07OCT21 (21280) (USN)
TAKEOFF OBSTACLE NOTES:
Rwy 5, vessels with masts up to 150’ MSL, located 500’ to 2900’ from DER, fence 73’ from DER, 391’ right of cntrln, 27’ MSL.
Vehicle 88’ from DER, 467’ right of cntrln, 37’ MSL.
Fence 153’ from DER, 451’ right of cntrln, 27’ MSL.
Shipping channel 1496’ from DER, 11’ left of cntrln, 150’ MSL.
Rwy 23, vessels with masts up to 150’ MSL, located 4000’ from DER, 1600’ right of cntrln.

MELBOURNE, FL
MELBOURNE ORLANDO INTL (MLB)
TAKEOFF MINIMUMS AND (OBSTACLE) DEPARTURE PROCEDURES
AMDT 1 05JUL07 (21224) (FAA)
TAKEOFF OBSTACLE NOTES:
Rwy 5, multiple trees 1584' from DER, 222' left of centerline, up to 43' AGL/64' MSL.
Rwy 9L, tree 108' from DER, 479' left of centerline, 25' AGL/62' MSL.
Rwy 9R, multiple trees 1855' from DER, 434' left of centerline, up to 43' AGL/73' MSL.
Tree 1332' from DER, 434' right of centerline, 36' AGL/56' MSL.
Rwy 23, bush 20' from DER, 217' right of centerline, 8' AGL/33' MSL.
Tower 6034' from DER, 750' right of centerline, 152' AGL/177' MSL.
Multiple trees beginning 284' from DER, 121' left of centerline, up to 47' AGL/72' MSL.
Rwy 27R, multiple trees beginning 543' from DER, 169' left of centerline, up to 51' AGL/81' MSL.
Multiple trees beginning 1202' from DER, 114' right of centerline, up to 58' AGL/88' MSL.

MERRITT ISLAND, FL
MERRITT ISLAND (COI)
TAKEOFF MINIMUMS AND (OBSTACLE) DEPARTURE PROCEDURES
ORIG 13APR06 (06103) (FAA)
TAKEOFF OBSTACLE NOTES:
Rwy 29, rod on airport beacon obstruction light, 138' from DER, 514' right of centerline, 61' AGL/67' MSL.
Pole, 82' from DER, 403' left of centerline, 34' AGL/40' MSL.
Pole, 468' from DER, 508' right of centerline, 37' AGL/43' MSL.
Hangar, 221' from DER, 278' right of centerline, 22' AGL/28' MSL.
Pole 490' from DER, 306' left of centerline, 28' AGL/34' MSL.
Tree, 987' from DER, 476' left of centerline, 40' AGL/46' MSL.
Tree 1287' from DER, 432' left of centerline, 47' AGL/53' MSL.
Tree 1415' from DER, 560' left of centerline, 48' AGL/54' MSL.
Building, 556' from DER, 530' right of centerline, 25' AGL/31' MSL.
Tree, 1654' from DER, 464' right of centerline, 48' AGL/54' MSL.
Obstruction light on windsock, 551' from DER, 234' right of centerline, 19' AGL/25' MSL.
Pole, 1306' from DER, 259' right of centerline, 37' AGL/43' MSL.
Building, 429' from DER, 436' right of centerline, 15' AGL/21' MSL.
Tree, 1953' from DER, 524' left of centerline, 49' AGL/55' MSL.

MIAMI, FL

MIAMI EXEC (TMB)

TAKEOFF MINIMUMS AND (OBSTACLE) DEPARTURE PROCEDURES

AMDT 8A 20AUG15 (21168) (FAA)

DEPARTURE PROCEDURE:

Rwy 9L, climb heading 093° to 800 before turning right.
Rwy 9R, climb heading 093° to 900 before turning right.
Rwy 13, climb heading 133° to 1400 before turning right.
Rwy 27L, climb heading 273° to 1400 before turning left.
Rwy 27R, climb heading 273° to 1300 before turning left.
Rwy 31, climb heading 313° to 900 before turning left.

TAKEOFF OBSTACLE NOTES:

Rwy 9L, trees beginning 1731' from DER, 717' left of centerline, up to 100' AGL/119' MSL.
Tree 3013' from DER, 687' right of centerline, 100' AGL/119' MSL.
Rwy 9R, signs beginning 35' from DER, 182' left of centerline, up to 3' AGL/11' MSL.
Trees beginning 1296' from DER, 516' left of centerline, up to 100' AGL/119' MSL.
Tree 2712' from DER, 1185' right of centerline, 100' AGL/119' MSL.
Rwy 13, tree 1100' from DER, 764' right of centerline, 100' AGL/119' MSL.
Pole 1249' from DER, 588' right of centerline, 56' AGL/70' MSL.
Rwy 27L, transmission towers beginning 1858' from DER, 910' left of centerline, up to 72' AGL/82' MSL.
Tree 2106' from DER, 998' right of centerline, 100' AGL/119' MSL.
Rwy 27R, trees beginning 149' from DER, 352' right of centerline, up to 100' AGL/119' MSL.
Obstruction light on tower 372' from DER, 458' right of centerline, 54' AGL/64' MSL.
Obstruction light antenna 385' from DER, 450' right of centerline, 49' AGL/59' MSL.
Rwy 31, trees beginning 163' from DER, 410' left of centerline, up to 100' AGL/119' MSL.
Tree 3583' from DER, 360' right of centerline, 100' AGL/119' MSL.

MIAMI INTL (MIA)

TAKEOFF MINIMUMS AND (OBSTACLE) DEPARTURE PROCEDURES

AMDT 18 12AUG21 (21224) (FAA)

TAKEOFF MINIMUMS:

Rwy 8L, std. w/min. climb gradient of 274' per NM to 1400.
Rwy 8R, std. w/min. climb gradient of 294' per NM to 1400.
Rwy 9, std. w/min. climb gradient of 295' per NM to 1400.
Rwy 12, 300-1¼ or std. w/min. climb gradient of 205' per NM to 300, or alternatively, with std. takeoff minimums and a 200' per NM climb gradient, takeoff must occur no later than 1200 feet prior to DER.

DEPARTURE PROCEDURE:

Rwy 12, climbing right turn to intercept DHP VORTAC R-125 to 1300 before turning left.

TAKEOFF OBSTACLE NOTES:

Rwy 8L, terrain 6' from DER, on centerline, 9' MSL.
Lighting 9' from DER, 55' left of centerline, 2' AGL/10' MSL.
Lighting beginning 10' from DER, 55' right of centerline, up to 2' AGL/10' MSL.
NAVAID 804' from DER, 499' right of centerline, 41' AGL/46' MSL.
Building 1317' from DER, 689' left of centerline, 59' AGL/65' MSL.
Transmission line 3282' from DER, 1330' left of centerline, 88' AGL/94' MSL.
Building 4493' from DER, 830' left of centerline, 118' AGL/123' MSL.
Building 4535' from DER, 817' left of centerline, 119' AGL/124' MSL.
Tower 5340' from DER, 1058' left of centerline, 140' AGL/144' MSL.
Rwy 8R, trees beginning 1880' from DER, 921' left of centerline, up to 82' MSL.
Tree 2721' from DER, 274' left of centerline, 62' AGL/83' MSL.
Tree 2881' from DER, 207' left of centerline, 84' MSL.
Tree 3006' from DER, 251' left of centerline, 88' MSL.
Tree 3249' from DER, 370' left of centerline, 94' MSL.
Elevator 3393' from DER, 1347' left of centerline, 93' AGL/98' MSL.
Pole, transmission line beginning 3709' from DER, 1302' left of centerline, up to 114' MSL.
Transmission lines beginning 3835' from DER, 1378' left of centerline, up to 108' AGL/116' MSL.
Rwy 9, wind indicator 103' from DER, 487' right of centerline, 21' AGL/27' MSL.
Pole 694' from DER, 599' right of centerline, 35' AGL/38' MSL.
Transmission line 3301' from DER, 1103' left of centerline, 90' AGL/94' MSL.
Transmission line 3361' from DER, 1308' left of centerline, 95' AGL/99' MSL.
Tower 4027' from DER, 1526' right of centerline, 119' AGL/125' MSL.
Buildings beginning 4053' from DER, 1501' right of centerline, up to 120' AGL/126' MSL.
Rwy 12, traverse way, trees beginning 5' from DER, 299' right of centerline, up to 28' MSL.
Traverse way 615' from DER, 239' right of centerline, 29' MSL.
Sign 644' from DER, 591' right of centerline, 33' AGL/43' MSL.
Sign, traverse way beginning 693' from DER, 184' right of centerline, up to 33' AGL/46' MSL.
Building 2911' from DER, 1140' right of centerline, 101' AGL/106' MSL.
Building 3158' from DER, 991' right of centerline, 104' AGL/108' MSL.
Building 4688' from DER, 1547' left of centerline, 120' AGL/126' MSL.
Building 1 NM from DER, 2106' right of centerline, 154' AGL/164' MSL.
Rwy 26L, pole, trees beginning 1079' from DER, 680' left of centerline, up to 40' AGL/47' MSL.
Tower 1304' from DER, 639' right of centerline, 42' AGL/48' MSL.
Pole 1772' from DER, 824' left of centerline, 46' AGL/53' MSL.

CON'T

22 FEB 2024 to 21 MAR 2024
22 FEB 2024 to 21 MAR 2024

MIAMI, FL (CON'T)

MIAMI INTL (MIA) (CON'T)

Rwy 26L (CON'T), tree 2448' from DER, 433' right of centerline, 71' MSL.
Tree 2456' from DER, 123' left of centerline, 72' MSL.
Tree 2461' from DER, 523' right of centerline, 73' MSL.
Trees beginning 2468' from DER, 243' right of centerline, up to 80' MSL.
Trees beginning 2468' from DER, 353' left of centerline, up to 83' MSL.
Trees beginning 2474' from DER, 239' left of centerline, up to 86' MSL.
Rwy 26R, lighting beginning 9' from DER, 54' left of centerline, up to 2' AGL/10' MSL.
Lighting 10' from DER, 54' right of centerline, 2' AGL/10' MSL.
Pole, building beginning 534' from DER, 431' right of centerline, up to 38' MSL.
Trees, pole beginning 1048' from DER, 36' right of centerline, up to 40' AGL/47' MSL.
Tower, building, pole beginning 1291' from DER, 78' right of centerline, up to 49' AGL/55' MSL.
Tower 1305' from DER, 160' left of centerline, 42' AGL/48' MSL.
Pole 2003' from DER, 779' right of centerline, 53' AGL/60' MSL.
Tree 2449' from DER, 366' left of centerline, 71' MSL.
Tree 2457' from DER, 923' left of centerline, 72' MSL.
Tree 2462' from DER, 276' left of centerline, 73' MSL.
Trees beginning 2469' from DER, 234' left of centerline, up to 80' MSL.
Rwy 27, lighting 3' from DER, 54' left of centerline, 1' AGL/9' MSL.
Pole, traverse way beginning 376' from DER, 494' left of centerline, up to 37' AGL/44' MSL.
Crane, pole, traverse way, sign beginning 1939' from DER, 92' left of centerline, up to 131' AGL/140' MSL.
Poles beginning 2049' from DER, 96' right of centerline, up to 40' AGL/60' MSL.
Crane 4538' from DER, 1600' left of centerline, 153' AGL/159' MSL.
Rwy 30, pole 560' from DER, 563' left of centerline, 40' AGL/47' MSL.
Pole 1414' from DER, 774' right of centerline, 38' AGL/46' MSL.
Tower 1452' from DER, 434' right of centerline, 42' AGL/48' MSL.
Tower 1734' from DER, 912' right of centerline, 49' AGL/55' MSL.
Trees beginning 1978' from DER, 823' left of centerline, up to 72' MSL.
Trees beginning 2228' from DER, 251' left of centerline, up to 80' MSL.

MIAMI-OPA LOCKA EXEC (OPF)

TAKEOFF MINIMUMS AND (OBSTACLE) DEPARTURE PROCEDURES
AMDT 9A 29MAR18 (21168) (FAA)

DEPARTURE PROCEDURE:
Rwy 9L, climb heading 093° to 1100 before turning north.
Rwy 9R, climb heading 093° to 1000 before turning north.
Rwy 12, climb heading 128° to 600 before turning north.
Rwy 27R, climb heading 273° to 500 before turning north.

TAKEOFF OBSTACLE NOTES:
Rwy 9L, fence 48' from DER, 498' left of centerline, 10' AGL/17' MSL.
Utility line 57' from DER, 505' left of centerline, 9' AGL/16' MSL.
Airport sign 40' from DER, 311' right of centerline, 2' AGL/9' MSL.
Tree 103' from DER, 481' left of centerline, 9' AGL/16' MSL.
Trees beginning 1632' from DER, 657' left of centerline, up to 43' AGL/57' MSL.
Trees beginning 3215' from DER, 885' right of centerline, up to 81' AGL/ 95' MSL.
Rwy 9R, airfield light 6' from DER, 59' right of centerline, 1' AGL/7' MSL.
Light pole 1439' from DER, 739' right of centerline, 38' AGL/45' MSL.
Pole 1436' from DER, 735' right of centerline, 40' AGL/47' MSL.
Pole 1581' from DER, 892' left of centerline, 40' AGL/47' MSL.
Tree 11' from DER, 502' right of centerline, 8' AGL/15' MSL.
Trees beginning 1590' from DER, 511' left of centerline, up to 109' AGL/116' MSL.
Trees beginning 1577' from DER, 243' right of centerline, up to 57' AGL/64' MSL.
Rwy 12, REIL 3' from DER, 118' left of centerline 1' AGL/9' MSL.
REIL 3' from DER, 118' right of centerline, 1' AGL/9' MSL.
Poles 1560' from DER, 266' right of centerline, 40' AGL/48' MSL.
Pole 461' from DER, 609' right of centerline, 31' AGL/39' MSL.
Trees beginning 1080' from DER, 118' right of centerline, up to 62' AGL/70' MSL.
Trees beginning 1051' from DER, 93' left of centerline, up to 56' AGL/64' MSL.
Rwy 27L, fence 194' from DER, 483' right of centerline, 10' AGL/16' MSL.
Poles beginning 336' from DER, 94' left and 530' right of centerline, up to 67' AGL/73' MSL.
Trees beginning 1056' from DER, 756' left of centerline, up to 37' AGL/43' MSL.
Building 1106' from DER, 739' right of centerline, 36' AGL/42' MSL.
Rwy 27R, airport sign 38' from DER, 310' left of centerline, 1' AGL/8' MSL.
Antenna on building 1568' from DER, 756' left of centerline, 44' AGL/51' MSL.
Trees beginning 165' from DER, 45' left of centerline, up to 115' AGL/122' MSL.
Trees beginning 1059' from DER, 229' right of centerline, up to 107' AGL/114' MSL.
Rwy 30, airport sign 40' from DER, 233' right of centerline, 1' AGL/9' MSL.
Tower 2543' from DER, 565' right of centerline, 76' AGL/84' MSL.
Antenna on building 2526' from DER, 572' right of centerline, 74' AGL/82' MSL.
Tower 3760' from DER, 969' right of centerline, 100' AGL/105' MSL.
Trees beginning 1312' from DER, 590' left of centerline, up to 43' AGL/51' MSL.
Trees beginning 1711' from DER, 614' right of centerline, up to 78' AGL/86' MSL.

MILTON, FL

PETER PRINCE FLD (2R4)

TAKEOFF MINIMUMS AND (OBSTACLE) DEPARTURE PROCEDURES

ORIG-A 01JUL10 (22055) (FAA)

TAKEOFF OBSTACLE NOTES:

Rwy 18, trees beginning 102' from DER, 51' left of centerline, up to 93' AGL/163' MSL.
Trees beginning 1014' from DER, 13' right of centerline, up to 83' AGL/153' MSL.
Pole 711' from DER, 164' left of centerline, 40' AGL/106' MSL.
Poles beginning 766' from DER, 68' right of centerline, 40' AGL/109' MSL.
Railroad 572' from end of runway, 23' AGL/110' MSL.
Road 549' from DER, 17' AGL/94' MSL.
Rwy 36, trees beginning 27' from DER, 329' left of centerline up to 45' AGL/101' MSL.
Trees beginning 40' from DER, 98' right of centerline, up to 30' AGL/90' MSL.

NAPLES, FL

NAPLES MUNI (APF)

TAKEOFF MINIMUMS AND (OBSTACLE) DEPARTURE PROCEDURES

AMDT 2 17DEC09 (09351) (FAA)

DEPARTURE PROCEDURE:

Rwy 14, climb heading 137° to 600 before turning left.

TAKEOFF OBSTACLE NOTES:

Rwy 5, trees beginning 92' from DER, left and right of centerline, up to 82' AGL/92' MSL.
Tanks 1308' from DER, 293' left of centerline, up to 34' AGL/44' MSL.
Rwy 14, trees beginning 97' from DER, left and right of centerline, up to 101' AGL/108' MSL.
Rwy 23, trees beginning 126' from DER, left and right of centerline, up to 66' AGL/70' MSL.
Rwy 32, trees beginning 339' from DER, left and right of centerline, up to 119' AGL/123' MSL.

NEW SMYRNA BEACH, FL

MASSEY RANCH AIRPARK (X50)

TAKEOFF MINIMUMS AND (OBSTACLE) DEPARTURE PROCEDURES

ORIG-A 23JUN16 (16175) (FAA)

TAKEOFF OBSTACLE NOTES:

Rwy 18, Bush 11’ from DER, 128’ left of centerline, 14’ MSL.
Trees beginning 24’ from DER, 282’ right of centerline, up to 42’ MSL.
Tree 78’ from DER, 443’ right of centerline, 53’ MSL.
Tree and bush beginning 148’ from DER, 137’ left of centerline, up to 57’ MSL.
Trees beginning 189’ from DER, 196’ right of centerline, up to 71’ AGL/78’ MSL.
Tree and pole beginning 286’ from DER, 5’ left of centerline, up to 83’ MSL.
Trees beginning 1457’ from DER, 7’ right of centerline, up to 84’ MSL.
Tree and pole beginning 1932’ from DER, 39’ right of centerline, up to 89’ MSL.
Trees beginning 2659’ from DER, 64’ right of centerline, up to 91’ MSL.
Tree 3307’ from DER, 542’ right of centerline, 96’ MSL.
Rwy 36, Vehicles on road and in parking lot, tree, pole, and t-l tower beginning 7’ from DER, 48’ left of centerline, up to 48’ AGL/58’ MSL.
Tree, pole, and t-l tower beginning 199’ from DER, 12’ right of centerline, up to 67’ MSL.
Tree and pole beginning 289’ from DER, 172’ right of centerline, up to 75’ MSL.
Tree, t-l tower, and pole beginning 355’ from DER, 4’ left of centerline, up to 68’ AGL/77’ MSL.
Tree, pole, and building beginning 606’ from DER, 34’ left of centerline, up to 81’ MSL.
Tree and building beginning 1215’ from DER, 4’ right of centerline, up to 82’ MSL.
Trees beginning 1418’ from DER, 144’ right of centerline, up to 87’ MSL.
Trees beginning 1499’ from DER, 7’ left of centerline, up to 88’ MSL.
Antenna 4763’ from DER, 506’ right of centerline, 154’ AGL/160‘ MSL.
Tower 4777’ from DER, 430’ right of centerline, 152’ AGL/161’ MSL.

NEW SMYRNA BEACH MUNI (EVB)

TAKEOFF MINIMUMS AND (OBSTACLE) DEPARTURE PROCEDURES

AMDT 3 20JUN19 (19171) (FAA)

TAKEOFF OBSTACLE NOTES:

Rwy 2, sign 55’ from DER, 494’ left of centerline, 3’ AGL/12’ MSL.
Sign 70’ from DER, 289’ right of centerline, 3’ AGL/11’ MSL.
Trees beginning 462’ from DER, 429’ left of centerline, up to 42’ MSL.
Trees beginning 572’ from DER, 283’ left of centerline, up to 44’ MSL.
Trees beginning 952’ from DER, 256’ left of centerline, up to 69’ MSL.
Trees beginning 1067’ from DER, 282’ left of centerline, up to 72’ MSL.
Tree 1250’ from DER, 607’ left of centerline, 79’ MSL.
Trees and poles beginning 1270’ from DER, 22’ left of centerline, up to 91’ MSL.
Tree 1786’ from DER, 564’ right of centerline, 55’ MSL.
Tree 1816’ from DER, 584’ right of centerline, 56’ MSL.

CON’T

22 FEB 2024 to 21 MAR 2024
22 FEB 2024 to 21 MAR 2024

NEW SMYRNA BEACH, FL (CON'T)

NEW SMYRNA BEACH MUNI (EVB) (CON'T)

Rwy 7, tree, fence, road beginning 38' from DER, 0' of centerline, up to 45' MSL.
Fences, roads beginning 167' from DER, on centerline and left of centerline, up to 7' AGL/26' MSL.
Trees beginning 309' from DER, 17' left of centerline, up to 36' MSL.
Transmission line, tree beginning 348' from DER, 198' right of centerline, up to 45' AGL/51' MSL.
Trees, transmission line beginning 793' from DER, 54' left of centerline, up to 56' MSL.
Transmission line 890' from DER, 151' right of centerline, 56' AGL/58' MSL.
Transmission line 1201' from DER, 173' left of centerline, 55' AGL/57' MSL.
Transmission line, pole beginning 1480' from DER, 150' left of centerline, up to 58' AGL/60' MSL.
Transmission line, pole beginning 1832' from DER, 145' left of centerline, up to 54' AGL/61' MSL.
Rwy 11, lighting beginning 6' from DER, left and right of centerline, 1' AGL/12' MSL.
Road, tree beginning 408' from DER, 400' left of centerline, up to 61' MSL.
Tree, pole, road beginning 532' from DER, 222' left of centerline, up to 65' MSL.
Trees beginning 634' from DER, 350' left of centerline, up to 68' MSL.
Tree 1283' from DER, 353' right of centerline, 51' MSL.
Trees beginning 1360' from DER, 421' right of centerline, up to 64' MSL.
Pole, tree beginning 1671' from DER, 789' right of centerline, up to 70' AGL/75' MSL.
Rwy 20, trees, road, sign, pole beginning 12' from DER, on centerline, up to 75' MSL.
Trees beginning 253' from DER, 341' left of centerline, up to 52' MSL.
Tree, pole, road beginning 343' from DER, 12' left of centerline, up to 71' MSL.
Tree, pole beginning 542' from DER, 63' right of centerline, up to 80' MSL.
Tree, pole beginning 1052' from DER, 7' right of centerline, up to 82' MSL.
Trees beginning 1195' from DER, 29' left of centerline, up to 80' MSL.
Trees, pole beginning 1345' from DER, 9' left of centerline, up to 84' MSL.
Trees beginning 1826' from DER, 479' right of centerline, up to 85' MSL.
Rwy 25, tree 30' from DER, 302' right of centerline, 28' MSL.
Trees, fence, pole beginning 76' from DER, left and right of centerline, up to 44' MSL.
Trees beginning 160' from DER, 84' right of centerline, up to 53' MSL.
Trees beginning 354' from DER, left and right of centerline, 58' MSL.
Trees beginning 420' from DER, 366' left of centerline, up to 66' MSL.
Pole, tree beginning 1376' from DER, 120' left of centerline, up to 72' AGL/77' MSL.
Trees, pole beginning 1566' from DER, 24' left of centerline, up to 83' MSL.
Trees beginning 1712' from DER, 3' right of centerline, up to 96' MSL.
Rwy 29, trees, runway lighting beginning 4' from DER, left and right of centerline, up to 2' AGL/30' MSL.
Trees beginning 452' from DER, 462' right of centerline, 62' MSL.
Tree, pole beginning 560' from DER, 292' right of centerline, up to 69' MSL.
Trees beginning 1289' from DER, left and right of centerline, up to 85' MSL.
Trees beginning 1534' from DER, 17' right of centerline, 89' MSL.
Trees beginning 1788' from DER, 88' left of centerline, up to 98' MSL.
Trees beginning 1852' from DER, 72' left of centerline, up to 100' MSL.

OCALA, FL

OCALA INTL-JIM TAYLOR FLD (OCF)

TAKEOFF MINIMUMS AND (OBSTACLE) DEPARTURE PROCEDURES

ORIG 15JAN09 (21140) (FAA)

DEPARTURE PROCEDURE:
Rwy 8, climb heading 069° to 500 before proceeding on course.

TAKEOFF OBSTACLE NOTES:
Rwy 18, trees beginning 316' from DER, 527' right of centerline, up to 30' AGL/106' MSL.
Rwy 26, trees beginning 83' from DER, 255' left of centerline, up to 100' AGL/204' MSL.
Trees beginning 272' from DER, 10' right of centerline, up to 100' AGL/194' MSL.
Rwy 36, taxiing aircraft, 43' from DER, 305' right of centerline, up to 10' AGL/94' MSL.
Trees beginning 196' from DER, 500' left of centerline, up to 70' AGL/164' MSL.
Trees beginning 2668' from DER, 305' right of centerline, up to 70' AGL/162' MSL.

ORLANDO, FL

EXEC (ORL)

TAKEOFF MINIMUMS AND (OBSTACLE) DEPARTURE PROCEDURES

AMDT 4 15NOV12 (21168) (FAA)

DEPARTURE PROCEDURE:
Rwy 25, climb heading 253° to 700 before turning right.
Rwy 31, climb heading 317° to 600 before turning left.

TAKEOFF OBSTACLE NOTES:
Rwy 7, trees beginning 189' from DER, 542' right of centerline, up to 114' AGL /132' MSL.
Tree 882' from DER, 709' left of centerline, 44' AGL /143' MSL.
Rwy 25, trees beginning 1314' from DER, 597' right of centerline, up to 119' AGL /191' MSL.
Rwy 13, numerous roads, poles, towers, signs, trees and buildings left and right of centerline, beginning 300' from DER, 481' right of centerline, up to 119' AGL /173' MSL.
Rwy 31, building 2.1 NM from DER, 5569' left of centerline, 435' AGL/524' MSL.
Numerous trees, poles, towers, antennas and buildings left and right of centerline, beginning 613' from DER, 442' left of centerline, up to 126' AGL /189' MSL.

ORLANDO, FL (CON'T)

KISSIMMEE GATEWAY (ISM)

TAKEOFF MINIMUMS AND (OBSTACLE) DEPARTURE PROCEDURES

ORIG-A 15AUG19 (19227) (FAA)

TAKEOFF MINIMUMS:

Rwy 6, 300-1.

TAKEOFF OBSTACLE NOTES:

Rwy 6, vehicles on road, terrain beginning 23' from DER, 165' left of centerline, up to 93' MSL.
Vehicles on road beginning 55' from DER, 421' right of centerline, up to 91' MSL.
Poles, building beginning 592' from DER, 280' right of centerline, up to 44' AGL/113' MSL.
Tree 1061' from DER, 654' left of centerline, 123' MSL.
Poles, trees beginning 1188' from DER, 360' left of centerline, up to 54' AGL/127' MSL.
Pole 1242' from DER, 656' right of centerline, 45' AGL/114' MSL.
Trees beginning 1636' from DER, 207' left of centerline, up to 129' MSL.
Tree 1836' from DER, 708' left of centerline, 135' MSL.
Trees beginning 1846' from DER, 11' left of centerline, up to 144' MSL.
Tree 2304' from DER, 822' right of centerline, 136' MSL.
Rwy 15, tree 117' from DER, 417' right of centerline, 125' MSL.
Tree, poles beginning 483' from DER, 19' right of centerline, up to 136' MSL.
Trees beginning 1216' from DER, 203' left of centerline, up to 135' MSL.
Rwy 24, trees, fence beginning 36' from DER, 251' left of centerline, up to 123' MSL.
Trees beginning 584' from DER, 285' right of centerline, up to 110' MSL.
Tree 1200' from DER, 276' right of centerline, 121' MSL.
Poles, trees beginning 1347' from DER, 83' right of centerline, up to 63' AGL/130' MSL.
Tree 1503' from DER, 475' left of centerline, 124' MSL.
Trees beginning 1561' from DER, 281' left of centerline, up to 125' MSL.
Tree, pole beginning 1634' from DER, 328' left of centerline, up to 127' MSL.
Pole, trees beginning 1710' from DER, 232' left of centerline, up to 75' AGL/145' MSL.
Tree 2168' from DER, 997' right of centerline, 143' MSL.
Trees beginning 2209' from DER, 703' right of centerline, up to 153' MSL.
Trees beginning 2320' from DER, 80' right of centerline, up to 156' MSL.
Tree 2628' from DER, 89' left of centerline, 149' MSL.
Tree 2935' from DER, 1' left of centerline, 157' MSL.
Rwy 33, pole 910' from DER, 713' right of centerline, 40' AGL/119' MSL.
Trees beginning 1141' from DER, 656' left of centerline, up to 140' MSL.
Tree 1166' from DER, 777' right of centerline, 136' MSL.
Tree 2608' from DER, 222' right of centerline, 148' MSL.

ORLANDO INTL (MCO)

TAKEOFF MINIMUMS AND (OBSTACLE) DEPARTURE PROCEDURES

AMDT 3A 07DEC17 (17341) (FAA)

TAKEOFF OBSTACLE NOTES:

Rwy 17L, NAVAID 9' from DER, on centerline, 1' AGL/90' MSL.
Light pole 9' from DER, 120' left of centerline, 3' AGL/91' MSL.
Tree 1534' from DER, 902' left of centerline, 74' AGL/152' MSL.
Rwy 17R, tree 1373' from DER, 855' right of centerline, 58' AGL/133' MSL.
Trees beginning 1473' from DER, 873' right of centerline, up to 60' AGL/136' MSL.
Rwy 18L, light pole 13' from DER, 283' right of centerline, 3' AGL/94' MSL.
Tree 2863' from DER, 1079' left of centerline, 89' AGL/169' MSL.
Trees beginning 2930' from DER, 1166' left of centerline, up to 95' AGL/171' MSL.
Rwy 18R, light pole 14' from DER, 282' left of centerline, 3' AGL/92' MSL.
Rwy 35L, light pole 15' from DER, 283' right of centerline, 5' AGL/92' MSL.
Pole 1250' from DER, 686' left of centerline, 45' AGL/129' MSL.
Rwy 35R, NAVAID 9' from DER, on centerline, 1' AGL/90' MSL.
NAVAID 1191' from DER, 768' right of centerline, 36' AGL/125' MSL.
Pole 1661' from DER, 922' right of centerline, 44' AGL/133' MSL.
Pole 1712' from DER, 916' left of centerline, 25' AGL/134' MSL.
Trees beginning 2235' from DER, 1012' right of centerline, up to 167' MSL.
Rwy 36L, sign 3' from DER, 373' left of centerline, 3' AGL/93' MSL.
Pole 1061' from DER, 779' left of centerline, 45' AGL/137' MSL.
Sign 1063' from DER, 775' right of centerline, 38' AGL/123' MSL.
Rwy 36R, building and tree beginning 962' from DER, 582' right of centerline, up to 30' AGL/121' MSL.
Sign 1054' from DER, 704' left of centerline, 29' AGL/119' MSL.
Sign 1062' from DER, 725' left of centerline, 38' AGL/123' MSL.

ORLANDO, FL (CON'T)

ORLANDO SANFORD INTL (SFB)

TAKEOFF MINIMUMS AND (OBSTACLE) DEPARTURE PROCEDURES

AMDT 10 02MAY13 (13122) (FAA)

DEPARTURE PROCEDURE:

Rwy 27L, climb heading 275° to 800 before proceeding northbound.
Rwy 27C, climb heading 275° to 900 before proceeding northbound.
Rwy 27R, climb heading 275° to 900 before proceeding northbound.
Rwy 36, climb heading 005° to 2000 before proceeding on course.

TAKEOFF OBSTACLE NOTES:

Rwy 9R, pole at DER, 277' left of centerline, 7' AGL/25' MSL.
Utilities beginning 430' from DER, 206' left of centerline, up to 39' AGL/55' MSL.
Utilities beginning 430' from DER, 109' right of centerline, up to 39' AGL/55' MSL.
Trees beginning 986' from DER, 13' left of centerline, up to 52' AGL/83' MSL.
Trees beginning 1078' from DER, 463' right of centerline, up to 66' AGL/80' MSL.
Rwy 9C, vehicles on roadway beginning 22' from DER, left and right of centerline, up to 15' AGL/62' MSL.
Bush 163' from DER, 276' left of centerline, 9' AGL/57' MSL.
Pole 1079' from DER, 314' right of centerline, 36' AGL/78' MSL.
Trees beginning 1130' from DER, 90' right of centerline, up to 82' AGL/112' MSL.
Rwy 27R, antenna on building 131' from DER, 441' right of centerline, 18' AGL/67' MSL.
Poles and trees beginning 1157' from DER, 146' left of centerline, up to 65' AGL/120' MSL.
Trees beginning 1395' from DER, 66' right of centerline, up to 67' AGL/116' MSL.
Rwy 27C, buildings beginning 1548' from DER, 336' left of centerline, up to 47' AGL/101' MSL.
Trees beginning 1753' from DER, 295' right of centerline, up to 76' AGL/105' MSL.
Towers and antenna beginning 2340' from DER, 544' left of centerline, up to 135' AGL/194' MSL.
Rwy 27L, approach lights beginning 32' from DER, on centerline, up to 17' AGL/56' MSL.
Fence 229' from DER, 16' right of centerline, 12' AGL/51' MSL.
Vehicles on roadway beginning 359' from DER, left and right of centerline, up to 15' AGL/60' MSL.
Trees beginning 865' from DER, 574' left of centerline, up to 50' AGL/94' MSL.
Pole 1006' from DER, 692' right of centerline, 43' AGL/86' MSL.
Trees beginning 2733' from DER, left and right of centerline, up to 91' AGL/135' MSL.
Rwy 18, poles beginning 945' from DER, 482' left of centerline, up to 44' AGL/71' MSL.
Trees beginning 997' from DER, 280' left of centerline, up to 63' AGL/93' MSL.
Trees beginning 1277' from DER, 621' right of centerline, up to 83' AGL/112' MSL.
Rwy 36, trees beginning 330' from DER, 508' right of centerline, up to 43' AGL/77' MSL.
Trees beginning 1104' from DER, 617' left of centerline, up to 85' AGL/114' MSL.

ORMOND BEACH, FL

ORMOND BEACH MUNI (OMN)

TAKEOFF MINIMUMS AND (OBSTACLE) DEPARTURE PROCEDURES

ORIG-B 10OCT19 (19283) (FAA)

TAKEOFF MINIMUMS:

Rwy 9, 300-1¼ or std. w/min. climb of 239' per NM to 300, or alternatively, with std. takeoff minimums and a normal 200' per NM climb gradient, takeoff must occur no later than 2000' prior to DER.

TAKEOFF OBSTACLE NOTES:

Rwy 9, tree 60' from DER, 370' left of centerline, 67' MSL.
Tree 188' from DER, 448' left of centerline, 86' MSL.
Trees beginning 254' from DER, 1' left of centerline, up to 93' MSL.
Tree 431' from DER, 544' right of centerline, 65' MSL.
Trees beginning 457' from DER, 390' right of centerline, up to 66' MSL.
Trees beginning 773' from DER, 333' right of centerline, up to 70' MSL.
Trees beginning 811' from DER, 472' right of centerline, up to 73' MSL.
Trees beginning 932' from DER, 340' right of centerline, up to 80' MSL.
Trees beginning 1023' from DER, 223' right of centerline, up to 81' MSL.
Trees beginning 1088' from DER, 377' right of centerline, up to 82' MSL.
Trees beginning 1146' from DER, 65' right of centerline, up to 87' MSL.
Trees beginning 1358' from DER, 16' right of centerline, up to 88' MSL.
Trees beginning 1883' from DER, on and right of centerline, up to 92' MSL.
Trees beginning 2365' from DER, 254' left of centerline, up to 108' MSL.
Pole 5855' from DER, 1589' left of centerline, 195' MSL.
Rwy 17, trees beginning 40' from DER, 334' left of centerline, up to 72' MSL.
Trees beginning 46' from DER, 328' right of centerline, up to 94' MSL.
Trees beginning 185' from DER, 49' left of centerline, up to 85' MSL.
Trees, poles, building beginning 232' from DER, 104' right of centerline, up to 97' MSL.
Trees beginning 1090' from DER, 6' left of centerline, up to 86' MSL.
Trees beginning 1459' from DER, 15' left of centerline, up to 93' MSL.
Trees beginning 1609' from DER, 7' left of centerline, up to 95' MSL.
Trees beginning 1724' from DER, 286' right of centerline, up to 99' MSL.
Trees beginning 1828' from DER, 668' left of centerline, up to 96' MSL.
Trees beginning 1835' from DER, 183' left of centerline, up to 104' MSL.
Trees beginning 1870' from DER, 32' left of centerline, up to 105' MSL.
Trees beginning 1965' from DER, 98' right of centerline, up to 100' MSL.
Trees beginning 2051' from DER, 85' left of centerline, up to 111' MSL.

CON'T

22 FEB 2024 to 21 MAR 2024
22 FEB 2024 to 21 MAR 2024

ORMOND BEACH, FL (CON'T)

ORMOND BEACH MUNI (OMN) (CON'T)

Rwy 17 (CON'T), trees beginning 2095' from DER, 160' right of centerline, up to 101' MSL.
Trees beginning 2136' from DER, 45' left of centerline, up to 113' MSL.
Tree 2188' from DER, 207' right of centerline, 102' MSL.
Trees beginning 2200' from DER, 16' right of centerline, up to 110' MSL.
Rwy 27, vegetation beginning 7' from DER, 269' right of centerline, up to 39' MSL.
Tree 48' from DER, 387' right of centerline, 47' MSL.
Trees beginning 58' from DER, 10' left of centerline, up to 99' MSL.
Trees, vegetation beginning 83' from DER, 163' right of centerline, up to 90' MSL.
Trees, vegetation beginning 312' from DER, 155' right of centerline, up to 103' MSL.
Trees beginning 812' from DER, 307' right of centerline, up to 108' MSL.
Trees beginning 1277' from DER, 14' left of centerline, up to 104' MSL.
Trees beginning 1280' from DER, 11' right of centerline, up to 109' MSL.
Trees beginning 2315' from DER, 381' left of centerline, up to 111' MSL.
Rwy 35, trees beginning 48' from DER, 264' right of centerline, up to 47' MSL.
Pole, tree beginning 242' from DER, 380' right of centerline, up to 54' MSL.
Vegetation 266' from DER, 395' left of centerline, 35' MSL.
Vegetation beginning 279' from DER, 272' left of centerline, up to 40' MSL.
Trees, poles beginning 379' from DER, 17' right of centerline, up to 101' MSL.
Trees beginning 486' from DER, 385' left of centerline, up to 93' MSL.
Trees, poles beginning 602' from DER, 41' left of centerline, up to 97' MSL.
Trees, poles beginning 1735' from DER, 17' left of centerline, up to 99' MSL.

PAHOKEE, FL

PALM BEACH COUNTY GLADES (PHK)
TAKEOFF MINIMUMS AND (OBSTACLE) DEPARTURE PROCEDURES
AMDT 2 01FEB18 (18032) (FAA)

TAKEOFF OBSTACLE NOTES:
Rwy 18, vegetation 131' from DER, 371' right of centerline, 26' MSL.
Tree 565' from DER, 292' right of centerline, 30' MSL.
Sign 634' from DER, 502' right of centerline, 6' AGL/42' MSL.
Terrain 721' from DER, 513' right of centerline, 40' MSL.
Tree 751' from DER, 320' right of centerline, 42' MSL.
Tower 1589' from DER, 691' left of centerline, 132' AGL/142' MSL.
Rwy 36, tree 701' from DER, 645' right of centerline, 74' MSL.
Tree 1076' from DER, 325' left of centerline, 63' MSL.
Pole 1098' from DER, 131' left of centerline, 35' AGL/51' MSL.
Tree 1099' from DER, 157' right of centerline, 56' MSL.
Tree 1116' from DER, 149' left of centerline, 46' MSL.
Pole 1241' from DER, 50' right of centerline, 35' AGL/52' MSL.
Tree 2059' from DER, 103' left of centerline, 68' MSL.
Tree 2210' from DER, 108' right of centerline, 84' MSL.
Tree 2816' from DER, 280' right of centerline, 93' MSL.
Tree 2970' from DER, 314' right of centerline, 100' MSL.

PALATKA, FL

PALATKA MUNI - LT KAY LARKIN FLD (28J)
TAKEOFF MINIMUMS AND (OBSTACLE) DEPARTURE PROCEDURES
AMDT 1 15JUN23 (23166) (FAA)

TAKEOFF MINIMUMS:
Rwy 9, 300-1¼ or std. w/min. climb of 212' per NM to 300, or alternatively, with std. takeoff minimums and a normal 200' per NM climb gradient, takeoff must occur no later than 1400' prior to DER.

TAKEOFF OBSTACLE NOTES:
Rwy 9, tree 557' from DER, 369' right of centerline, 48' MSL.
Tree 625' from DER, 394' left of centerline, 49' MSL.
Tree 668' from DER, 403' right of centerline, 81' MSL.
Trees beginning 673' from DER, 86' right of centerline, up to 82' MSL.
Tree 677' from DER, 575' left of centerline, 93' MSL.
Trees beginning 708' from DER, 321' left of centerline, up to 99' MSL.
Trees beginning 1136' from DER, 434' left of centerline, up to 100' MSL.
Trees beginning 1241' from DER, 7' left of centerline, up to 106' MSL.
Tree 1928' from DER, 117' right of centerline, 99' MSL.
Trees beginning 2127' from DER, 38' right of centerline, up to 100' MSL.
Tree 2256' from DER, 121' right of centerline, 105' MSL.
Trees beginning 2413' from DER, 166' left of centerline, up to 107' MSL.
Tree 3625' from DER, 480' left of centerline, 126' MSL.
Tree 3633' from DER, 100' left of centerline, 131' MSL.
Tree 3803' from DER, 45' left of centerline, 137' MSL.
Tower 1 NM from DER, 1397' right of centerline, 166' AGL/201' MSL.
CON'T

PALATKA, FL (CON'T)

PALATKA MUNI - LT KAY LARKIN FLD (28J) (CON'T)

Rwy 17, trees beginning 263' from DER, 194' right of centerline, up to 100' AGL/164' MSL.
Trees, bldgs beginning 756' from DER, 38' left of centerline, up to 100' AGL/199' MSL.
Trees, bldgs beginning 1132' from DER, 379' right of centerline, up to 100' AGL/175' MSL
Rwy 27, trees beginning 14' from DER, 382' left of centerline, up to 75' MSL.
Tree 48' from DER, 485' right of centerline, 75' MSL.
Tree 160' from DER, 457' right of centerline, 81' MSL.
Trees beginning 186' from DER, 351' right of centerline, up to 85' MSL.
Trees beginning 325' from DER, 380' right of centerline, up to 87' MSL.
Tree 326' from DER, 526' left of centerline, 79' MSL.
Tree 362' from DER, 386' left of centerline, 80' MSL.
Tree 438' from DER, 399' right of centerline, 93' MSL.
Trees beginning 465' from DER, 365' left of centerline, up to 84' MSL.
Trees beginning 533' from DER, 269' right of centerline, up to 101' MSL.
Trees beginning 719' from DER, 421' left of centerline, up to 90' MSL.
Trees beginning 809' from DER, 356' left of centerline, up to 93' MSL.
Trees beginning 1026' from DER, 56' left of centerline, up to 95' MSL.
Tree 1656' from DER, 360' left of centerline, 105' MSL.
Tree 1725' from DER, 438' left of centerline, 109' MSL.
Trees beginning 1799' from DER, 326' left of centerline, up to 112' MSL.
Rwy 35, ramp 221' from DER, 448' right of centerline, 17' AGL/65' MSL.
Trees, bldgs beginning 605' from DER, 40' left of centerline, up to 100' AGL/129' MSL.
Bldgs beginning 684' from DER, 423' right of centerline, up to 34' AGL/86' MSL.
Tree 1260' from DER, 539' right of centerline, 100' AGL/133' MSL.
Tree 1359' from DER, 29' right of centerline, 100' AGL/149' MSL.
Tree 1372' from DER, 310' right of centerline, 100' AGL/154' MSL.
Trees beginning 1820' from DER, 121' left of centerline, up to 100' AGL/165' MSL

PALM COAST, FL

FLAGLER EXEC (FIN)

TAKEOFF MINIMUMS AND (OBSTACLE) DEPARTURE PROCEDURES

AMDT 2A 23APR20 (21168) (FAA)

TAKEOFF MINIMUMS:
Rwys 18W, 36W - NA.

DEPARTURE PROCEDURE:
Rwy 24, climb heading 241° to 600 before turning right.
Rwy 29, climb heading 280° to 1600 before turning right.

TAKEOFF OBSTACLE NOTES:
Rwy 6, pole 9' from DER, 29' right of centerline, 2' AGL/33' MSL.
Trees beginning 244' from DER, 440' right of centerline, up to 43' MSL.
Tree 375' from DER, 570' right of centerline, 44' MSL.
Trees beginning 474' from DER, 43' left of centerline, up to 99' MSL.
Trees beginning 497' from DER, 474' right of centerline, up to 52' MSL.
Tree 706' from DER, 143' right of centerline, 56' MSL.
Tree 726' from DER, 418' right of centerline, 72' MSL.
Tree 728' from DER, 546' right of centerline, 74' MSL.
Trees beginning 792' from DER, 482' right of centerline, up to 57' AGL/85' MSL.
Trees beginning 925' from DER, 31' right of centerline, up to 89' MSL.
Tree 1796' from DER, 363' left of centerline, 102' MSL.
Tree 1802' from DER, 420' left of centerline, 103' MSL.
Trees beginning 1817' from DER, 505' left of centerline, up to 108' MSL.
Tree 2016' from DER, 16' right of centerline, 97' MSL.
Trees beginning 2475' from DER, 405' right of centerline, up to 122' MSL.
Tree 3253' from DER, 565' left of centerline, 115' MSL.
Rwy 11, trees beginning 18' from DER, 192' left of centerline, up to 54' MSL.
Trees beginning 34' from DER, 120' right of centerline, up to 35' AGL/60' MSL.
Trees, water tower beginning 246' from DER, 18' right of centerline, up to 63' MSL.
Tree 319' from DER, 493' left of centerline, 55' MSL.
Trees beginning 336' from DER, 1' left of centerline, up to 57' MSL.
Trees, poles beginning 561' from DER, 410' left of centerline, up to 87' MSL.
Trees beginning 723' from DER, 297' left of centerline, up to 92' MSL.
Trees beginning 775' from DER, 353' left of centerline, up to 98' MSL.
Trees beginning 803' from DER, 285' left of centerline, up to 101' MSL.
Trees beginning 1115' from DER, 549' right of centerline, up to 64' MSL.
Trees beginning 1272' from DER, 320' right of centerline, up to 89' MSL.
Trees beginning 1465' from DER, 134' right of centerline, up to 103' MSL.
Trees beginning 1862' from DER, 390' left of centerline, up to 107' MSL.
Trees beginning 1906' from DER, 293' left of centerline, up to 112' MSL.
Trees beginning 2151' from DER, 23' left of centerline, up to 113' MSL.
Trees beginning 2273' from DER, 11' right of centerline, up to 107' MSL.
Trees beginning 2495' from DER, 24' left of centerline, up to 114' MSL.
Trees beginning 2699' from DER, 101' left of centerline, up to 116' MSL.
CON'T

PALM COAST, FL (CON'T)

FLAGLER EXEC (FIN) (CON'T)

Rwy 11 (CON'T), trees beginning 2789' from DER, 120' left of centerline, up to 120' MSL.
Trees beginning 3370' from DER, 638' left of centerline, up to 108' AGL/131' MSL.
Rwy 24, tree 142' from DER, 441' right of centerline, 88' MSL.
Tree 1315' from DER, 839' left of centerline, 111' MSL.
Rwy 29, tree 46' from DER, 408' left of centerline, 88' MSL.
Tree 163' from DER, 424' left of centerline, 67' AGL/92' MSL.
Trees beginning 294' from DER, 19' left of centerline, up to 86' AGL/110' MSL.
Tree 1121' from DER, 128' right of centerline, 39' AGL/62' MSL.
Tree 1122' from DER, 103' right of centerline, 43' AGL/67' MSL.
Tree 1148' from DER, 6' right of centerline, 46' AGL/69' MSL.
Trees beginning 1170' from DER, 13' right of centerline, up to 48' AGL/71' MSL.
Tree 1426' from DER, 28' right of centerline, 53' AGL/78' MSL.
Trees beginning 1431' from DER, 1' right of centerline, up to 56' AGL/79' MSL.
Tree 1582' from DER, 848' right of centerline, 83' MSL.
Tree 1772' from DER, 786' right of centerline, 92' MSL.
Trees beginning 1952' from DER, 46' left of centerline, up to 116' MSL.
Trees beginning 1962' from DER, 567' right of centerline, up to 106' MSL.
Tree 4263' from DER, 873' left of centerline, 124' AGL/141' MSL.

PANAMA CITY, FL

NORTHWEST FLORIDA BEACHES INTL (ECP)

TAKEOFF MINIMUMS AND (OBSTACLE) DEPARTURE PROCEDURES

AMDT 1 18NOV10 (10322) (FAA)

TAKEOFF MINIMUMS:
Rwys 3, 21, NA-Environmental.

TAKEOFF OBSTACLE NOTES:
Rwy 16, trees beginning 2644' from DER, 382' right of centerline, up to 82' AGL/131' MSL.

DIVERSE VECTOR AREA (RADAR VECTORS)

ORIG 14SEP17 (17257) (FAA)

Rwys 16, 34, heading as assigned by ATC.

PATRICK SFB (KCOF)

COCOA BEACH, FL

TAKEOFF MINIMUMS AND (OBSTACLE) DEPARTURE PROCEDURES

AMDT 1 02DEC21 (21336) (USSF)

TAKEOFF MINIMUMS:
Rwy 3, 200-1¼, or std. w/min. climb of 210'/NM to 500. Alternatively, with standard takeoff minimums and normal 200'/NM climb gradient, takeoff must occur no later than 1300' prior to DER.
Rwy 11, diverse departure authorized.
Rwy 21, 200-1¼, or std. w/min. climb of 220'/NM to 500. Alternatively, with standard takeoff minimums and normal 200'/NM climb gradient, takeoff must occur no later than 1600' prior to DER.
Rwy 29, diverse departure authorized.

TAKEOFF OBSTACLE NOTES:
Rwy 3, antenna 3074' from DER, 1290' left of centerline, 84' MSL.
Tree 2816' from DER, 1136' left of centerline, 75' AGL/79' MSL.
Tree 1901' from DER, 994' left of centerline, 50' AGL/56' MSL.
Tree 2749' from DER, 731' left of centerline, 70' AGL/76' MSL.
Terrain 16' from DER, 500' left of centerline, 16' MSL.
Terrain 38' from DER, 510' left of centerline, 16' MSL.
Terrain 46' from DER, 512' left of centerline, 16' MSL.
Vehicles on road 756' from DER, 574' right of centerline, 28' MSL.
Vehicles on road 735' from DER, 620' right of centerline, 25' MSL.
Terrain 5877' from DER, 2075' left of centerline, 167' MSL.
Rwy 11, vehicles on road 621' from DER, 212' left of centerline, 29' MSL.
Vehicles on road 512' from DER, 437' left of centerline, 29' MSL.
Vehicles on road 1031' from DER, 664' right of centerline, 29' MSL.
Vehicles on road 832' from DER, 240' right of centerline, 29' MSL.
Vehicles on road 666' from DER, 91' right of centerline, 37' MSL.
Vehicles on road 934' from DER, 472' right of centerline, 29' MSL.
Terrain 26' from DER, 13' right of centerline, 16' MSL.
Terrain abeam inward of DER, 500' left of centerline, 16' MSL.
Vehicles on road 640' from DER, 90' right of centerline, 26' MSL.
Rwy 21, sailboat 1787' from DER, 984' right of centerline, 43' MSL.
Terrain 584' from DER, 509' left of centerline, 20' MSL.
Terrain 46' from DER, 512' left of centerline, 20' MSL.
Terrain 19' from DER, 505' left of centerline, 20' MSL.
Terrain 16' from DER, 500' left of centerline, 20' MSL.
Terrain 228' from DER, 500' right of centerline, 18' MSL.
Terrain 127' from DER, 534' right of centerline, 17' MSL.
Terrain 5878' from DER, 2075' left of centerline, 172' MSL.
CON'T

PATRICK SFB (KCOF) (CON'T)

COCOA BEACH, FL (CON'T)

Rwy 29, cable 299' from DER, 107' right of centerline, 9' MSL.
Vehicles on road 352' from DER, 11' right of centerline, 20' MSL.
Vehicles on road 418' from DER, 162' right of centerline, 18' MSL.
Vehicles on road 444' from DER, 310' right of centerline, 20' MSL.
Cable 149' from DER, 460' right of centerline, 9' MSL.
Terrain abeam from DER, 500' left of centerline, 13' MSL.
Terrain 95' from DER, 326' left of centerline, 13' MSL.
Terrain abeam DER, 25' right of centerline, 16' MSL.
Terrain 17' from DER, 332' right of centerline, 16' MSL.
Boat 362' from DER, 476' left of centerline, 10' MSL.
Bird cannon 98' from DER, 455' right of centerline, 8' MSL.
Cable 177' from DER, 133' left of centerline, 10' MSL.
Vegetation 389' from DER, 350' left of centerline, 45' MSL.

PENSACOLA, FL

PENSACOLA INTL (PNS)

TAKEOFF MINIMUMS AND (OBSTACLE) DEPARTURE PROCEDURES

AMDT 1 26JUL12 (12208) (FAA)

DEPARTURE PROCEDURE:
Rwy 26, climb heading 260° to 600 before turning south.

TAKEOFF OBSTACLE NOTES:
Rwy 26, trees beginning 84' from DER, left and right of centerline, up to 100' AGL/146' MSL.
Rod 398' from DER, 596' left of centerline, 56' AGL/132' MSL.
Rwy 35, trees beginning 490' from DER, left and right of centerline, up to 100' AGL/182' MSL.

PENSACOLA NAS (FORREST SHERMAN FLD) (KNPA)

TAKEOFF MINIMUMS AND (OBSTACLE) DEPARTURE PROCEDURES

AMDT 1 02DEC21 (21336) (USN)

TAKEOFF MINIMUMS:
Rwy 7R, std. w/min. climb of 214'/NM to 500.

TAKEOFF OBSTACLE NOTES:
Rwy 7R, pylon 4859' from DER, 1448' right of centerline, 96' AGL/142' MSL.

PERRY, FL

PERRY-FOLEY (FPY)

TAKEOFF MINIMUMS AND (OBSTACLE) DEPARTURE PROCEDURES

AMDT 1B 21MAY20 (20142) (FAA)

DEPARTURE PROCEDURE:
Rwy 36, climb on heading 350° to 600 before turning right.

TAKEOFF OBSTACLE NOTES:
Rwy 12, trees beginning 1227' from DER, left and right of centerline, up to 100' AGL/144' MSL.
Rwy 18, traverse_way 2' from DER, 105' right of centerline, 41' MSL.
Tree 5' from DER, 256' right of centerline, 43' MSL.
Tree 127' from DER, 235' right of centerline, 47' MSL.
Trees beginning 471' from DER, 618' left of centerline, up to 105' MSL.
Tree 764' from DER, 703' right of centerline, 91' MSL.
Trees beginning 801' from DER, 400' right of centerline, up to 105' MSL.
Trees beginning 856' from DER, 8' left of centerline, up to 110' MSL.
Trees beginning 914' from DER, 0' of centerline, up to 113' MSL.
Trees beginning 1061' from DER, 42' left of centerline, up to 121' MSL.
Trees beginning 1364' from DER, 111' right of centerline, up to 114' MSL.
Trees beginning 1843' from DER, 24' right of centerline, up to 85' AGL/116' MSL.
Trees beginning 1844' from DER, 5' left of centerline, up to 92' AGL/125' MSL.
Trees beginning 2236' from DER, 109' right of centerline, up to 117' MSL.
Trees beginning 2484' from DER, 73' right of centerline, up to 119' MSL.
Trees beginning 2643' from DER, 74' right of centerline, up to 81' AGL/120' MSL.
Trees beginning 2696' from DER, 167' right of centerline, up to 129' MSL.
Trees beginning 2717' from DER, 66' right of centerline, up to 153' MSL.
Trees beginning 2834' from DER, 104' right of centerline, up to 155' MSL.
Rwy 30, sign 112' from DER, 265' right of centerline, 5' AGL/47' MSL.
Tree 768' from DER, 683' left of centerline, 116' MSL.
Trees beginning 836' from DER, 408' left of centerline, up to 122' MSL.
Tree, pole beginning 1090' from DER, 54' right of centerline, up to 99' MSL.
Tree, pole beginning 1178' from DER, 38' left of centerline, up to 128' MSL.
Tree 1323' from DER, 606' right of centerline, 101' MSL.
Trees beginning 1324' from DER, 3' right of centerline, up to 116' MSL.
Tree, pole beginning 1584' from DER, 191' left of centerline, up to 132' MSL.
Trees beginning 1588' from DER, 173' right of centerline, up to 123' MSL.
Trees beginning 1663' from DER, 563' right of centerline, up to 135' MSL.
Trees beginning 1805' from DER, 393' right of centerline, up to 100' AGL/144' MSL.

CON'T

PERRY, FL (CON'T)

PERRY-FOLEY (FPY) (CON'T)

Rwy 36, vegetation 78' from DER, 149' left of centerline, 5' AGL/47' MSL.
Sign 101' from DER, 258' right of centerline, 5' AGL/47' MSL.
Tree 308' from DER, 543' right of centerline, 88' MSL.
Trees beginning 391' from DER, 516' right of centerline, up to 97' MSL.
Trees beginning 574' from DER, 501' left of centerline, up to 65' MSL.
Trees beginning 579' from DER, 540' right of centerline, up to 106' MSL.
Pole, catenary beginning 725' from DER, 497' left of centerline, up to 70' MSL.
Tree, pole beginning 741' from DER, 2' right of centerline, up to 113' MSL.
Tree 849' from DER, 712' left of centerline, 102' MSL.
Tree 932' from DER, 749' left of centerline, 109' MSL.
Tree, catenary, pole beginning 963' from DER, 75' left of centerline, up to 116' MSL.
Tree, antenna beginning 1401' from DER, 10' left of centerline, up to 135' MSL.
Trees beginning 2049' from DER, 5' left of centerline, up to 146' MSL.
Tree 2728' from DER, 959' right of centerline, 119' MSL.
Trees beginning 2984' from DER, 83' right of centerline, up to 120' MSL.
Trees beginning 3042' from DER, 94' right of centerline, up to 121' MSL.
Trees beginning 3049' from DER, 133' right of centerline, up to 122' MSL.
Trees beginning 3068' from DER, 66' right of centerline, up to 87' AGL/128' MSL.
Trees beginning 3176' from DER, 5' right of centerline, up to 89' AGL/133' MSL.
Tower 2.4 NM from DER, 4368' right of centerline, 415' AGL/454' MSL.

PLANT CITY, FL

PLANT CITY (PCM)

TAKEOFF MINIMUMS AND (OBSTACLE) DEPARTURE PROCEDURES

ORIG 07MAY09 (09127) (FAA)

TAKEOFF OBSTACLE NOTES:

Rwy 10, trees beginning 264' from DER, 561' left of centerline, up to 100' AGL/229' MSL.
Trees beginning 490' from DER, 13' right of centerline, up to 100' AGL/239' MSL.
Rwy 28, trees beginning 50' from DER, 278' right of centerline, up to 100' AGL/254' MSL.
Trees beginning 515' from DER, 15' left of centerline, up to 100' AGL/249' MSL.
Train on railroad tracks, 380' from DER, 547' left of centerline, up to 23' AGL/172' MSL.
Vehicles on roadway, 266' from DER, 137' left of centerline, up to 15' AGL/169' MSL.

POMPANO BEACH, FL

POMPANO BEACH AIRPARK (PMP)

TAKEOFF MINIMUMS AND (OBSTACLE) DEPARTURE PROCEDURES

AMDT 6 20APR23 (23110) (FAA)

TAKEOFF MINIMUMS:

Rwy 10, 300-1¼ or std. w/min. climb of 265' per NM to 300.
Rwy 15, 300-2 or std. w/min. climb of 425' per NM to 500.

TAKEOFF OBSTACLE NOTES:

Rwy 6, light poles 9' from DER, 149' left of centerline, 3' AGL/14' MSL.
Light poles 9' from DER, 149'right of centerline, 3' AGL/15' MSL.
Trees beginning 101' from DER, 492' right of centerline, up to 84' MSL.
Trees beginning 151' from DER, 10' right of centerline, up to 86' MSL.
Fence 185' from DER, 380' left of centerline, 9' AGL/20' MSL.
Tree 297' from DER, 357' left of centerline, 63' MSL.
Trees beginning 353' from DER, 26' left of centerline, up to 77' MSL.
Tree 1724' from DER, 815' right of centerline, 89' MSL.
Tree 1838' from DER, 264' left of centerline, 78' MSL.
Tree 1936' from DER, 464' left of centerline, 82' MSL.
Trees beginning 1962' from DER, 249' left of centerline, up to 88' MSL.
Tree 2031' from DER, 103' left of centerline, 90' MSL.
Building spire 4536' from DER, 1064' left of centerline, 129' AGL/136' MSL.
Rwy 10, poles, fence beginning 43' from DER, 131' left of centerline, up to 11' AGL/20' MSL.
Sign, light poles beginning 45' from DER, 172' right of centerline, up to 6' AGL/15' MSL.
Tree 300' from DER, 510' left of centerline, 40' MSL.
Trees beginning 422' from DER, 387' left of centerline, up to 69' MSL.
Trees, poles beginning 518' from DER, 11' left of centerline, up to 82' MSL.
Trees, buildings, pole beginning 664' from DER, 193' right of centerline, up to 61' MSL.
Trees, poles, buildings beginning 1215' from DER, 58' right of centerline, up to 74' MSL.
Buildings beginning 5607' from DER, 604' right of centerline, up to 181' AGL/194' MSL.
Building 1 NM from DER, 887' left of centerline, 191' AGL/201' MSL.
Building beginning 1 NM from DER, 575' left of centerline, up to 203' AGL/213' MSL.
Building 1 NM from DER, 1731' left of centerline, 166' AGL/174' MSL.
Rwy 15, terrain 4' from DER, 495' right of centerline, 14' MSL.
Light poles 10' from DER, 54' left of centerline, 1' AGL/13' MSL.
Tree, buildings beginning 424' from DER, 489' left of centerline, up to 53' MSL.
Tree, pole beginning 519' from DER, 5' left of centerline, up to 61' MSL.
Tree 641' from DER, 559' right of centerline, 40' MSL.
Trees beginning 748' from DER, 12' right of centerline, up to 57' MSL.

CON'T

22 FEB 2024 to 21 MAR 2024
22 FEB 2024 to 21 MAR 2024

POMPANO BEACH, FL (CON'T)

POMPANO BEACH AIRPARK (PMP) (CON'T)

Rwy 15 (CON'T), trees, poles beginning 1264' from DER, 107' right of centerline, up to 62' MSL.
Trees beginning 1591' from DER, 151' left of centerline, up to 62' MSL.
Trees, pole beginning 1654' from DER, 13' left of centerline, up to 67' MSL.
Building, pole, trees beginning 1745' from DER, 232' right of centerline, up to 70' AGL/82' MSL.
Building 2284' from DER, 626' right of centerline, 80' AGL/91' MSL.
Building 2875' from DER, 1204' right of centerline, 84' AGL/93' MSL.
Building 3375' from DER, 1395' right of centerline, 130' AGL/138' MSL.
Building 5935' from DER, 2057' left of centerline, 208' AGL/214' MSL.
Building beginning 5993' from DER, 1348' left of centerline, up to 213' AGL/221' MSL.
Building 1.1 NM from DER, 1345' left of centerline, 268' AGL/277' MSL.
Buildings beginning 1.1 NM from DER, 1148' left of centerline, up to 300' AGL/308' MSL.
Building 1.6 NM from DER, 1343' right of centerline, 261' AGL/265' MSL.
Rwy 24, light poles 9' from DER, 149' right of centerline, 3' AGL/20' MSL.
Sign 24' from DER, 126' left of centerline, 4' AGL/22' MSL.
Building 125' from DER, 393' left of centerline, 15' AGL/32' MSL.
Trees beginning 190' from DER, 423' right of centerline, up to 44' MSL.
Trees beginning 244' from DER, 291' right of centerline, up to 57' MSL.
Tree 409' from DER, 512' right of centerline, 59' MSL.
Tree 423' from DER, 487' left of centerline, 51' MSL.
Trees, building beginning 433' from DER, 230' left of centerline, up to 64' MSL.
Tree 467' from DER, 600' right of centerline, 61' MSL.
Trees beginning 527' from DER, 239' right of centerline, up to 64' MSL.
Tanks, trees, building, poles beginning 630' from DER, 2' right of centerline, up to 60' AGL/80' MSL.
Trees, pole beginning 905' from DER, 3' left of centerline, up to 67' MSL.
Trees beginning 1286' from DER, 15' left of centerline, up to 72' MSL.
Tree 1730' from DER, 19' left of centerline, 73' MSL.
Tree 2179' from DER, 481' left of centerline, 85' MSL.
Trees beginning 2195' from DER, 252' left of centerline, up to 100' MSL.
Tree 2419' from DER, 835' right of centerline, 103' MSL.
Trees beginning 2802' from DER, 439' left of centerline up to 110' MSL.
Tree 2851' from DER, 510' left of centerline, 118' MSL.
Rwy 28, light poles 8' from DER, 126' right of centerline, 3' AGL/19' MSL.
Sign 29' from DER, 475' left of centerline, 3' AGL/22' MSL.
Trees beginning 319' from DER, 149' left of centerline, up to 41' MSL.
Trees beginning 357' from DER, 255' left of centerline, up to 44' MSL.
Tree 425' from DER, 232' left of centerline, 48' MSL.
Tree 451' from DER, 527' left of centerline, 53' MSL.
Trees beginning 506' from DER, 286' left of centerline, up to 55' MSL.
Trees beginning 535' from DER, 184' left of centerline, up to 59' MSL.
Trees, poles beginning 637' from DER, 214' left of centerline, up to 61' MSL.
Building, tree beginning 794' from DER, 218' left of centerline, up to 43' AGL/62' MSL.
Trees, pole beginning 849' from DER, 9' right of centerline, up to 53' MSL.
Trees, building beginning 868' from DER, 103' left of centerline, up to 69' MSL.
Tree 1000' from DER, 346' right of centerline, 58' MSL.
Tree 1016' from DER, 480' right of centerline, 60' MSL.
Trees, tanks, poles beginning 1039' from DER, 33' left of centerline, up to 76' MSL.
Trees beginning 1059' from DER, 236' right of centerline, up to 48' AGL/66' MSL.
Trees beginning 1316' from DER, 29' right of centerline, up to 67' MSL.
Rwy 33, building 29' from DER, 398' left of centerline, 18' AGL/34' MSL.
Tree 188' from DER, 436' right of centerline, 45' MSL.
Trees beginning 202' from DER, 357' right of centerline, up to 56' MSL.
Trees beginning 295' from DER, 470' right of centerline, up to 61' MSL.
Trees beginning 393' from DER, 303' left of centerline, up to 65' MSL.
Trees, poles beginning 457' from DER, 9' right of centerline, up to 66' MSL.
Trees beginning 629' from DER, 387' left of centerline, up to 74' MSL.
Trees, poles beginning 919' from DER, 103' left of centerline, up to 77' MSL.
Trees, pole beginning 1790' from DER, 11' left of centerline, up to 85' MSL.
Poles beginning 1822' from DER, 64' right of centerline, up to 52' AGL/70' MSL.
Pole 2001' from DER, 173' right of centerline, 52' AGL/71' MSL.

22 FEB 2024 to 21 MAR 2024
22 FEB 2024 to 21 MAR 2024

PONCE, PR

MERCEDITA (PSE) (TJPS)

TAKEOFF MINIMUMS AND (OBSTACLE) DEPARTURE PROCEDURES

AMDT 6 15AUG19 (21280) (FAA)

TAKEOFF MINIMUMS:

Rwy 12, std. w/min. climb of 300' per NM to 5300 or 5100-3 for VCOA.

Rwy 30, 500-1⅛ w/min. climb of 350' per NM to 1300 or std. w/min. climb of 808' per NM to 500 or 5100-3 for VCOA.

DEPARTURE PROCEDURE:

Rwy 12, climb heading 119° to 2500 then proceed on a heading between 304° CW to 248° from DER to avoid R-7105 and unmarked tethered balloon up to 15000 MSL.

Rwy 30, climbing left turn on a heading between 120° CW to 200° from DER. Do not proceed northbound (headings 316° CW 119°) until leaving 5000; do not proceed westbound (headings 200° CW 315°) until leaving 12000 to avoid R-7105 and unmarked tethered balloon up to 15000 MSL.

VCOA:

All runways: obtain ATC approval for VCOA when requesting IFR clearance. Climb in visual conditions to cross Mercedita airport at or above 5100 then climb heading 090° to SJU VORTAC R-239 to CLAYO INT/SJU 35 DME.

TAKEOFF OBSTACLE NOTES:

Rwy 12, trees beginning 126' from DER, 480' left of centerline, 5' AGL/31' MSL.
Poles beginning 126' from DER, 435' right of centerline, up to 68' AGL/87' MSL.
Trees beginning 306' from DER, 500' left of centerline, up to 33' AGL/64' MSL.
Poles and trees beginning 323' from DER, 219' right of centerline, up to 59' AGL/88' MSL.
Trees beginning 1003' from DER, 368' left of centerline, up to 33' AGL/71' MSL.
Stack 5536' from DER, 1749' right of centerline, 184' AGL/210' MSL.
Rwy 30, pole 143' from DER, 238' left of centerline, 43' AGL/76' MSL.
Pole 144' from DER, 281' right of centerline, 44' AGL/87' MSL.
Tree 3014' from DER, 1264' left of centerline, 133' MSL.
Poles and trees beginning 3217' from DER, 705' right of centerline, up to 46' AGL/353' MSL.
Trees, poles, and transmission line beginning 3282' from DER, 135' right of centerline, up to 41' AGL/355' MSL.
Tree 3492' from DER, 327' left of centerline, 164' MSL.
Tree 4406' from DER, 194' left of centerline, 55' AGL/172' MSL.
Tree 4765' from DER, 109' left of centerline, 34' AGL/176' MSL.
Pole 5243' from DER, 513' left of centerline, 106' AGL/197' MSL.
Poles beginning 5256' from DER, 188' left of centerline, up to 73' AGL/216' MSL.
Buildings beginning 1.2 NM from DER, 1986' left of centerline, up to 194' AGL/259' MSL.

PUNTA GORDA, FL

PUNTA GORDA (PGD)

TAKEOFF MINIMUMS AND (OBSTACLE) DEPARTURE PROCEDURES

AMDT 4 31DEC20 (20366) (FAA)

TAKEOFF MINIMUMS:

Rwys 9, 27, NA - airport authority request.

TAKEOFF OBSTACLE NOTES:

Rwy 4, lighting 39' from DER, 115' left of centerline, 3' AGL/27' MSL.
Tree 1560' from DER, 885' right of centerline, 76' MSL.
Rwy 15, vegetation 172' from DER, 286' left of centerline, 33' MSL.
Tree 377' from DER, 353' left of centerline, 48' MSL.
Trees beginning 1416' from DER, 558' left of centerline, up to 76' MSL.
Trees beginning 1851' from DER, 520' right of centerline, up to 104' MSL.
Tree 2378' from DER, 43' left of centerline, 83' MSL.
Rwy 22, sign 34' from DER, 242' left of centerline, 3' AGL/25' MSL.
Lighting 40' from DER, 113' right of centerline, 3' AGL/25' MSL.
Rwy 33, sign 22' from DER, 248' right of centerline, 4' AGL/20' MSL.
Sign 34' from DER, 253' left of centerline, 3' AGL/21' MSL.
Tree 938' from DER, 750' left of centerline, 50' MSL.

QUINCY, FL

QUINCY MUNI (2J9)

TAKEOFF MINIMUMS AND (OBSTACLE) DEPARTURE PROCEDURES

ORIG 12MAR09 (09071) (FAA)

TAKEOFF MINIMUMS:

Rwy 32, 300-2 or std. w/ min. climb of 217' per NM to 600, or alternatively, with standard takeoff minimums and a normal 200'/NM climb gradient, takeoff must occur no later than 1700' prior to DER.

TAKEOFF OBSTACLE NOTES:

Rwy 14, trees beginning abeam DER, 421' left of centerline, up to 100' AGL/299' MSL.
Vehicles on road abeam DER, 340' left of centerline, 15' AGL/214' MSL.
Trees beginning abeam DER, 255' right of centerline, up to 100' AGL/309' MSL.
Vehicles on road abeam DER, 174' right of centerline, 15' AGL/224' MSL.
Rwy 32, trees beginning abeam DER, 307' left of centerline, up to 100' AGL/329' MSL.
Vehicles on road abeam DER, 398' left of centerline, 15' AGL/244' MSL.
Trees beginning 910' from DER, 722' right of centerline, up to 100' AGL/329' MSL.
Power line beginning 1225' from DER, left and right of centerline, up to 79' AGL/327' MSL.

ST. AUGUSTINE, FL

NORTHEAST FLORIDA RGNL (SGJ)

TAKEOFF MINIMUMS AND (OBSTACLE) DEPARTURE PROCEDURES

ORIG 25OCT07 (07298) (FAA)

TAKEOFF OBSTACLE NOTES:

Rwy 2, trees 1355' from DER, 314' right of centerline, 100' AGL/104' MSL.
Rwy 20, aircraft on ramp abeam DER, 158' right of centerline, up to 32' AGL/41' MSL.
Aircraft on taxiway 182' from DER, on centerline, up to 32' AGL/42' MSL.
Buildings beginning 220' from DER, 402' right of centerline, up to 34' AGL/44' MSL.
Hangars beginning 174' from DER, 180' left of centerline, up to 16' AGL/26' MSL.
Vehicles on road and train on railroad beginning 419' from DER, 599' right of centerline, up to 23' AGL/37' MSL.
Numerous trees beginning 589' from DER, 652' right of centerline, up to 100' AGL/114' MSL.
Numerous trees beginning 754' from DER, 586' left of centerline, up to 100' AGL/109' MSL.
Rwy 24, hangars beginning abeam DER, 400' left of centerline, up to 16' AGL/26' MSL.
Aircraft on ramp 55' from DER, 119' right of centerline up to 32' AGL/41' MSL.
Buildings beginning 150' from DER, 191' right of centerline, up to 34' AGL/44' MSL.
Vehicles on road and train on railroad beginning 571' from DER, on centerline, up to 23' AGL/37' MSL.
Numerous trees beginning 742' from DER, left and right of centerline, up to 100' AGL/114' MSL.
Rwy 31, numerous trees beginning 87' from DER, 418' left of centerline, up to 89' AGL/98' MSL.
Vehicles on road and train on railroad beginning at DER, 237' left of centerline, up to 23' AGL/37' MSL.
Numerous trees beginning 242' from DER, 2' right of centerline, up to 85' AGL/99' MSL.

ST PETERSBURG, FL

ALBERT WHITTED (SPG)

TAKEOFF MINIMUMS AND (OBSTACLE) DEPARTURE PROCEDURES

AMDT 4 20APR23 (23110) (FAA)

TAKEOFF MINIMUMS:

Rwy 18, 300-1.
Rwy 36, 300-1 or std. w/min. climb of 845’ per NM to 300.

DEPARTURE PROCEDURE:

Rwy 7, climb on heading 067° to 500 before turning left.
Rwy 18, climb on heading 185° to 500 before turning right.
Rwy 25, climb on heading 247° to 700 before turning right.
Rwy 36, climb on heading 005° to 700 before turning left.

TAKEOFF OBSTACLE NOTES:

Rwy 7, light poles 10’ from DER, 17’ right of centerline, 2’ AGL/7’ MSL.
Sign 15’ from DER, 129’ left of centerline, 3’ AGL/7’ MSL.
Ships beginning 38’ from DER, left to right of centerline, up to 100’ AGL/100’ MSL.
Terrain 75’ from DER, 36’ left of centerline, 8’ MSL.
Rwy 18, building 9’ from DER, 483’ right of centerline, 27’ MSL.
Trees, vegetation beginning 20’ from DER, 226’ right of centerline, up to 32’ AGL/42’ MSL.
Rwy 25, fence 12’ from DER, on centerline, 15’ AGL/19’ MSL.
Tree, pole beginning 15’ from DER, 261’ right of centerline, up to 39’ MSL.
Tree 27’ from DER, 328’ left of centerline, 40’ MSL.
Trees beginning 124’ from DER, 133’ left of centerline, up to 49’ MSL.
Trees, poles beginning 149’ from DER, on centerline, up to 49’ MSL.
Buildings, trees, vehicles on road beginning 154’ from DER, 2’ left of centerline, up to 87’ MSL.
Trees, buildings, poles beginning 254’ from DER, 4’ right of centerline, up to 52’ MSL.
Buildings, trees, poles, transmission lines beginning 293’ from DER, 4’ left of centerline, up to 92’ MSL.
Buildings, trees, poles, monument beginning 459’ from DER, 10’ right of centerline, up to 73’ AGL/81’ MSL.
Buildings, trees beginning 1170’ from DER, 26’ right of centerline, up to 73’ AGL/86’ MSL.
Building, trees beginning 1773’ from DER, 123’ right of centerline, up to 87’ MSL.
Building, trees beginning 1834’ from DER, 151’ right of centerline, up to 88’ MSL.
Buildings, trees, poles beginning 1863’ from DER, 1’ right of centerline, up to 94’ MSL.
Buildings, trees, pole beginning 2047’ from DER, 18’ right of centerline, up to 122’ MSL.
Buildings, trees, poles beginning 2538’ from DER, 46’ right of centerline, up to 132’ MSL.
Trees beginning 3121’ from DER, 822’ left of centerline, up to 97’ MSL.
Tree 3598’ from DER, 168’ left of centerline, 103’ MSL.
Rwy 36, vegetation, sign beginning 30’ from DER, 273’ left of centerline, up to 7’ AGL/12’ MSL.
Sign 41’ from DER, 213’ right of centerline, 7’ AGL/11’ MSL.
Ships beginning 47’ from DER, left to right of centerline, up to 100’ AGL/100’ MSL.
Trees beginning 1489’ from DER, 453’ left of centerline, up to 46’ MSL.
Building 1868’ from DER, 705’ right of centerline, up to 86’ AGL/97’ MSL.
Buildings beginning 3561’ from DER, 750’ left of centerline, up to 156’ MSL.

22 FEB 2024 to 21 MAR 2024
22 FEB 2024 to 21 MAR 2024

ST. PETERSBURG-CLEARWATER, FL

ST PETE-CLEARWATER INTL (PIE)

TAKEOFF MINIMUMS AND (OBSTACLE) DEPARTURE PROCEDURES

AMDT 3B 29MAR18 (18088) (FAA)

TAKEOFF MINIMUMS:

Rwy 22, 200-1¼ or std. w/ min. climb of 230' per NM to 300, or alternatively, with std. takeoff minimums and a normal 200' per NM climb gradient, takeoff must occur no later than 1700' prior to DER.

TAKEOFF OBSTACLE NOTES:

Rwy 4, trees beginning 174' from DER, 279' right of centerline, up to 61' AGL/65' MSL.
Bush 495' from DER, 258' right of centerline, 27' AGL/31' MSL.
Bush 511' from DER, 326' left of centerline, 17' AGL/21' MSL.
Trees beginning 523' from DER, 225' left of centerline, up to 17' AGL/21' MSL.
Boats beginning 775' from DER, on centerline up to 25' AGL/25' MSL.
Rwy 18, building 689' from DER, 418' right of centerline, 34' AGL/44' MSL.
Signs beginning 909' from DER, 98' right of centerline, up to 50' AGL/58' MSL.
Poles beginning 970' from DER, 114' right of centerline, up to 51' AGL/58' MSL.
Poles beginning 1015' from DER, 103' left of centerline, up to 40' AGL/47' MSL.
Sign 1336' from DER, 198' left of centerline, 46' AGL/53' MSL.
Tree 2100' from DER, 996' right of centerline, 96' AGL/105' MSL.
Antenna on hopper 2583' from DER, 801' right of centerline, 76' AGL/89' MSL.
Rwy 22, tower 123' from DER, 359' left of centerline, 24' AGL/33' MSL.
Trees beginning 1235' from DER, 270' left of centerline, up to 65' AGL/70' MSL.
Tree 1629' from DER, 88' right of centerline, 61' AGL/70' MSL.
Tower 5591' from DER, 266' right of centerline, 153' AGL/168' MSL.
Rwy 36, boats beginning 646' from DER, 655' left of centerline, up to 25' AGL/25' MSL.

SAN JUAN, PR

FERNANDO LUIS RIBAS DOMINICCI (SIG) (TJIG)

TAKEOFF MINIMUMS AND (OBSTACLE) DEPARTURE PROCEDURES

AMDT 1 15OCT15 (21280) (FAA)

TAKEOFF MINIMUMS:

Rwy 9, 300-1¾ w/min. climb of 400' per NM to 2000.
Rwy 27, 300-1 w/min. climb of 300' per NM to 1200.

DEPARTURE PROCEDURE:

Rwy 9, climb heading 095° to 2000 before turning south.
Rwy 27, climb heading 275° to 1200 before turning south.

TAKEOFF OBSTACLE NOTES:

Rwy 9, vehicles on road beginning 190' from DER, crossing centerline, up to 15' AGL/23' MSL.
Trees beginning 200' from DER, up to 35' AGL/55' MSL.
Mobile crane 511' from DER, 570' right of centerline, 180' AGL/199' MSL.
Buildings with obstruction light beginning 1100' from DER, 430' right of centerline, up to 275' AGL/285' MSL.
Buildings beginning 2400' from DER, 640' right of centerline, up to 286' AGL/298' MSL.
Buildings beginning 3400' from DER, 200' left of centerline, up to 174' AGL/202' MSL.
Rwy 27, bushes beginning 20' from DER, left and right of centerline, up to 8' AGL/21' MSL.
Trees beginning 80' from DER, 390' right of centerline, up to 35' AGL/44' MSL.
Ships maneuvering from 2000' to 5200' from DER, up to 236' MSL.

LUIS MUNOZ MARIN INTL (SJU) (TJSJ)

TAKEOFF MINIMUMS AND (OBSTACLE) DEPARTURE PROCEDURES

AMDT 8 26MAR20 (21280) (FAA)

DEPARTURE PROCEDURE:

Rwy 8, climb on a heading between 258° CW to 108° from DER, or min. climb of 352' per NM to 5000 for headings 109° through 257°.
Rwy 10, climb on a heading between 282° CW to 105° from DER, or min. climb of 357' per NM to 4900 for headings 106° through 281°.
Rwy 26, climb on a heading between 258° CW to 077° from DER, or min. climb of 304' per NM to 4800 for headings 078° through 257°.
Rwy 28, climb on a heading between 261° CW to 101° from DER, or min. climb of 311' per NM to 4800 for headings 102° through 260°.

TAKEOFF OBSTACLE NOTES:

Rwy 8, tree 16' from DER, 349' right of centerline, 17' MSL.
Tree 32' from DER, 433' right of centerline, 20' MSL.
Trees beginning 36' from DER, 273' left of centerline, up to 38' MSL.
Trees, NAVAID, vegetation beginning 37' from DER, 2' right of centerline, up to 26' MSL.
Trees beginning 152' from DER, 304' right of centerline, up to 33' MSL.
Trees beginning 180' from DER, 325' left of centerline, up to 40' MSL.
Trees beginning 341' from DER, 324' right of centerline, up to 42' MSL.
Trees beginning 406' from DER, 119' right of centerline, up to 45' MSL.
Trees beginning 558' from DER, 561' right of centerline, up to 53' MSL.
Tree 626' from DER, 616' right of centerline, 54' MSL.
Tree 638' from DER, 557' right of centerline, 55' MSL.
Trees beginning 642' from DER, 472' right of centerline, up to 57' MSL.
Tree 2576' from DER, 719' left of centerline, 88' MSL.

CON'T

22 FEB 2024 to 21 MAR 2024
22 FEB 2024 to 21 MAR 2024

SAN JUAN, PR (CON'T)

LUIS MUNOZ MARIN INTL (SJU) (TJSJ) (CON'T)

Rwy 8 (CON'T), tree 2846' from DER, 787' left of centerline, 91' MSL.
Tree 3677' from DER, 173' left of centerline, 102' MSL.
Tree 3716' from DER, 168' left of centerline, 111' MSL.
Rwy 10, tree 166' from DER, 290' right of centerline, 37' MSL.
Trees beginning 171' from DER, 69' right of centerline, up to 60' MSL.
Tree 685' from DER, 657' left of centerline, 59' MSL.
Tree 918' from DER, 694' left of centerline, 63' MSL.
Trees beginning 1089' from DER, 19' left of centerline, up to 74' MSL.
Tree 1388' from DER, 25' right of centerline, 62' MSL.
Trees beginning 1392' from DER, 59' right of centerline, up to 66' MSL.
Trees beginning 1491' from DER, 7' right of centerline, up to 67' MSL.
Trees beginning 1636' from DER, 114' left of centerline, up to 75' MSL.
Trees beginning 1736' from DER, 32' left of centerline, up to 81' MSL.
Trees beginning 1770' from DER, 5' right of centerline, up to 70' MSL.
Trees beginning 1880' from DER, 395' right of centerline, up to 85' MSL.
Tree 2919' from DER, 1208' left of centerline, 85' MSL.
Building 3495' from DER, 1294' left of centerline, 120' MSL.
Building 3809' from DER, 1333' left of centerline, 121' MSL.
Rwy 26, sign 1' from DER, 349' left of centerline, 10' MSL.
Lighting 9' from DER, 74' right of centerline, 9' MSL.
Vegetation 12' from DER, 9' right of centerline, 11' MSL.
Vegetation 32' from DER, 127' left of centerline, 11' MSL.
Tree 92' from DER, 266' right of centerline, 28' MSL.
Tree 157' from DER, 375' left of centerline, 31' MSL.
Tree 322' from DER, 584' left of centerline, 49' MSL.
Trees beginning 417' from DER, 44' left of centerline, up to 70' MSL.
Trees, pole beginning 484' from DER, 611' right of centerline, up to 48' MSL.
Pole beginning 1325' from DER, 766' right of centerline, up to 50' MSL.
Pole 1679' from DER, 815' right of centerline, 60' MSL.
Pole 1797' from DER, 813' right of centerline, 64' MSL.
Trees, pole, lighting beginning 1809' from DER, 782' right of centerline, up to 71' MSL.
Trees, pole beginning 2308' from DER, 621' right of centerline, up to 79' MSL.
Tree 2412' from DER, 285' left of centerline, 74' MSL.
Trees beginning 2530' from DER, 689' right of centerline, up to 84' MSL.
Rwy 28, lighting 10' from DER, 5' right of centerline, 1' AGL/11' MSL.
Vehicles on road, sign, trees, pole, building beginning 171' from DER, 294' left of centerline, up to 46' MSL.
Trees beginning 423' from DER, 344' right of centerline, up to 35' MSL.
Trees beginning 480' from DER, 362' right of centerline, up to 45' MSL.
Trees beginning 700' from DER, 576' right of centerline, up to 46' MSL.
Trees beginning 784' from DER, 581' right of centerline, up to 54' MSL.
Trees beginning 927' from DER, 480' right of centerline, up to 57' MSL.
Building, sign, trees beginning 954' from DER, 456' left of centerline, up to 92' MSL.
Tree 1903' from DER, 842' right of centerline, 59' MSL.
Trees beginning 1905' from DER, 688' right of centerline, up to 61' MSL.

22 FEB 2024 to 21 MAR 2024
22 FEB 2024 to 21 MAR 2024

SARASOTA/BRADENTON, FL

SARASOTA/BRADENTON INTL (SRQ)

TAKEOFF MINIMUMS AND (OBSTACLE) DEPARTURE PROCEDURES
AMDT 2A 15DEC11 (21112) (FAA)

TAKEOFF OBSTACLE NOTES:

Rwy 4, vehicles on road 79' from DER, 500' right of centerline, up to 17' AGL/42' MSL.
Buildings beginning 142' from DER, 462' left of centerline, up to 23' AGL/48' MSL.
Trees beginning 357' from DER, 356' right of centerline, up to 78' AGL/101' MSL.
Trees beginning 925' from DER, 55' right of centerline, up to 79' AGL/102' MSL.
Poles beginning 317' from DER, 461' right of centerline, up to 57' AGL/80' MSL.
Poles beginning 1215' from DER, 113' left of centerline, up to 42' AGL/65' MSL.
Camera 1012' from DER, 251' left of centerline, 29' AGL/52' MSL.
Rwy 14, trees beginning 119' from DER, 430' left of centerline, up to 32' AGL/55' MSL.
Trees beginning 345' from DER, 362' left of centerline, up to 74' AGL/94' MSL.
Railroad 431' from DER, 533' left of centerline, 24' AGL/44' MSL.
Rwy 22, vehicles on road 125' from DER, through centerline, up to 17' AGL/38' MSL.
Trees beginning 235' from DER, 518' right of centerline, up to 103' AGL/113' MSL.
Trees beginning 819' from DER, 18' left of centerline, up to 95' AGL/102' MSL.
Poles/signs beginning 346' from DER, 528' right of centerline, up to 39' AGL/53' MSL.
Poles/signs beginning 882' from DER, 38' left of centerline, up to 46' AGL/63' MSL.
Buildings beginning 1689' from DER, 61' left of centerline, up to 65' AGL/75' MSL.
Pole 2225' from DER, 751' left of centerline, 65' AGL/85' MSL.
Rwy 32, wall 199' from DER, 465' left of centerline, up to 39' AGL/49' MSL.
Antenna 732' from DER, 168' left of centerline, 44' AGL/54' MSL.
Trees beginning 775' from DER, 274' left of centerline, up to 78' AGL/88' MSL.
Trees beginning 606' from DER, 645' right of centerline, 61' AGL/71' MSL.

SEBASTIAN, FL

SEBASTIAN MUNI (X26)

TAKEOFF MINIMUMS AND (OBSTACLE) DEPARTURE PROCEDURES

ORIG-B 11OCT18 (18284) (FAA)

TAKEOFF MINIMUMS:

Rwy 10, 300-1⅛ or std. w/min. climb of 293' per NM to 300.

TAKEOFF OBSTACLE NOTES:

Rwy 5, trees beginning 1700' from DER, 494' right of centerline, up to 100' AGL/124' MSL.
Trees beginning 4060' from DER, 391' right of centerline, up to 100' AGL/125' MSL.
Trees beginning 3702' from DER, 1281' left of centerline, up to 100' AGL/125' MSL.
Rwy 10, trees beginning 42' from DER, 418' left of centerline, up to 57' AGL/70' MSL.
Rwy 23, trees beginning 570' from DER, 225' right of centerline, up to 100' AGL/119' MSL.
Trees beginning 647' from DER, 354' left of centerline, up to 100' AGL/124' MSL.
Rwy 28, trees beginning 1035' from DER, 391' left of centerline, up to 100' AGL/119' MSL.
Trees beginning 1057' from DER, 515' right of centerline, up to 100' AGL/119' MSL.

SEBRING, FL

SEBRING RGNL (SEF)

TAKEOFF MINIMUMS AND (OBSTACLE) DEPARTURE PROCEDURES

AMDT 1 02MAY13 (13122) (FAA)

TAKEOFF OBSTACLE NOTES:

Rwy 1, fence, sign, Navaid, and trees beginning 28' from DER, 108' left of centerline, up to 9' AGL/63' MSL.
Tree 107' from DER, 263' right of centerline, 9' AGL/63' MSL.
Trees beginning 938' from DER, 520' right of centerline, up to 43' AGL/102' MSL.
Trees beginning 1184' from DER, 452' left of centerline, up to 45' AGL/104' MSL.
Rwy 14, fence and trees beginning 12' from DER, 318' right of centerline, up to 10' AGL/65' MSL.
Fence beginning 18' from DER, 320' left of centerline, up to 10' AGL/64' MSL.
Rwy 19, trees beginning 11' from DER, 216' right of centerline, up to 10' AGL/66' MSL.
Trees beginning 1891' from DER, 332' right of centerline, up to 77' AGL/132' MSL.
Rwy 32, fence, train on track, vehicle on road, and trees beginning 66' from DER, 5' right of centerline, up to 26' AGL/79' MSL.
Building, sign, pole, train on tracks, vehicles on road, fence, and trees beginning 105' from DER, 72' left of centerline, 39' AGL/91' MSL.
Tank, building, poles, and trees beginning 576' from DER, 48' right of centerline, up to 82' AGL/126' MSL.
Trees beginning 759' from DER, 2' left of centerline, up to 55' AGL/108' MSL.

STUART, FL

WITHAM FLD (SUA)

TAKEOFF MINIMUMS AND (OBSTACLE) DEPARTURE PROCEDURES

AMDT 2B 02MAY13 (21168) (FAA)

DEPARTURE PROCEDURE:

Rwy 25, climb heading 290° to 1700 before proceeding on course.
Rwy 30, climb heading 296° to 1300 before proceeding on course.

TAKEOFF OBSTACLE NOTES:

Rwy 7, trees beginning 75' from DER, 289' left of centerline, up to 100' AGL/114' MSL.
Trees beginning 268' from DER, 287' right of centerline, up to 100' AGL/109' MSL.
Rwy 12, pole and trees beginning 35' from DER, 55' left of centerline, up to 59' AGL/73' MSL.
Trees beginning 763' from DER, 45' right of centerline, up to 67' AGL/81' MSL.
Rwy 16, trees beginning 627' from DER, 42' left of centerline, up to 46' AGL/60' MSL.
Trees beginning 70' from DER, 202' right of centerline, up to 92' AGL/106' MSL.
Rwy 25, storage racks and trees beginning 176' from DER, 17' left of centerline, up to 36' AGL/55' MSL.
Antenna tower 4948' from DER, 1539' left of centerline, 151' AGL/167' MSL.
Trees beginning 123' from DER, 316' right of centerline, up to 55' AGL/79' MSL.
Rwy 30, trees beginning 155' from DER, 47' left of centerline, up to 72' AGL/86' MSL.
Poles and trees beginning 5' from DER, 28' right of centerline, up to 64' AGL/78' MSL.
Rwy 34, trees beginning 362' from DER, 473' left of centerline, up to 100' AGL/109' MSL.
Trees beginning 281' from DER, 385' right of centerline, up to 100' AGL/109' MSL.

TALLAHASSEE, FL

TALLAHASSEE INTL (TLH)

TAKEOFF MINIMUMS AND (OBSTACLE) DEPARTURE PROCEDURES

AMDT 1A 17SEP15 (15260) (FAA)

TAKEOFF OBSTACLE NOTES:

Rwv 9, control box 12' from DER, 123' right of centerline, 3' AGL/49' MSL.
Trees beginning 732' from DER, 658' left of centerline, up to 62' AGL/121' MSL.
Agricultural equipment, pole, mobile crane, and trees beginning 1237' from DER, 651' right of centerline, up to 74' AGL/134' MSL.
Rwy 18, trees beginning 2358' from DER, 761' left of centerline, up to 84' AGL/143' MSL.
Poles and trees beginning 1336' from DER, 790' right of centerline, up to 62' AGL/121' MSL.
Rwy 27, trees beginning 2463' from DER, 9' left of centerline, up to 62' AGL/171' MSL.
Trees beginning 2780' from DER, 3' right of centerline, up to 55' AGL/154' MSL.
Rwy 36, trees beginning 1270' from DER, 198' left of centerline, up to 81' AGL/140' MSL.
Trees beginning 1076' from DER, 94' right of centerline, up to 71' AGL/140' MSL.

TAMPA, FL

PETER O KNIGHT (TPF)

TAKEOFF MINIMUMS AND (OBSTACLE) DEPARTURE PROCEDURES

AMDT 7A 20JUN19 (19171) (FAA)

TAKEOFF MINIMUMS:

Rwys 4, 36, NA – Environmental
Rwy 18, 300-1⅜ or std. w/min. climb of 264' per NM to 300.

TAKEOFF OBSTACLE NOTES:

Rwy 18, sign 19' from DER, 104' right of centerline, 8' MSL.
Buildings, poles, vegetation, small boats beginning 35' from DER, 189' right of centerline, up to 32' AGL/37' MSL.
Sign 62' from DER, 161' left of centerline, 15' MSL.
Tree 103' from DER, 219' left of centerline, 28' MSL.
Small boats, sign, poles, vegetation beginning 251' from DER, 93' left of centerline, up to 30' AGL/30' MSL.
Tree 926' from DER, 334' left of centerline, 33' MSL.
Tree 1050' from DER, 293' left of centerline, 36' MSL.
Trees beginning 1695' from DER, 531' right of centerline, up to 52' MSL.
Tree 1792' from DER, 969' right of centerline, 62' MSL.
Rwy 22, fence 4' from DER, 460' right of centerline, 7' AGL/12' MSL.
Signs beginning 21' from DER, 120' left of centerline, up to 9' MSL.
Poles, vehicles on traverse way, small boats, trees beginning 104' from DER, 274' left of centerline, up to 26' AGL/32' MSL.
Trees, buildings beginning 288' from DER, 260' right of centerline, up to 37' MSL.
Tree 585' from DER, 379' right of centerline, 42' MSL.
Tree, pole beginning 628' from DER, 444' right of centerline, up to 48' MSL.
Tree, buildings beginning 646' from DER, 220' right of centerline, up to 52' MSL.
Trees, buildings, poles beginning 676' from DER, 211' right of centerline, up to 56' MSL.
Trees, buildings, poles beginning 854' from DER, 294' right of centerline, up to 76' MSL.

TAMPA EXEC (VDF)

TAKEOFF MINIMUMS AND (OBSTACLE) DEPARTURE PROCEDURES

AMDT 1 13JAN11 (21168) (FAA)

TAKEOFF MINIMUMS:

Rwy 18, std. w/min. climb of 230' per NM to 900, or 900-2½ for climb in visual conditions.

DEPARTURE PROCEDURE:

Rwy 5, climb heading 046° to 500 before turning left.
Rwy 18, for climb in visual conditions cross Tampa Exec airport at or above 800 before proceeding on course.

TAKEOFF OBSTACLE NOTES:

Rwy 5, trees beginning 1920' from DER, 45' right of centerline, up to 70' AGL/95' MSL.
Trees beginning 925' from DER, 343' left of centerline, up to 64' AGL/149' MSL.
Rwy 18, three light poles beginning 2894' from DER, 12' right of centerline, up to 149' AGL/149' MSL.
Trees beginning 193' from DER, 287' left of centerline, up to 68' AGL/91' MSL.
Three light poles beginning 2894' from DER, 5' right of centerline, up to 129' AGL/149' MSL.
Light on hanger 287' from DER, 336' left of centerline, 24' AGL/44' MSL.
Rwy 23, trees beginning at DER, 421' right of centerline, up to 58' AGL/73' MSL.
Obstruction light on navaid 611' from DER, 258' left of centerline, 23' AGL/37' MSL.
Windsock 731' from DER, 258' right of centerline, 24' AGL/38' MSL.
Rwy 36, trees beginning 37' from DER, 329' right of centerline, up to 72' AGL/82' MSL.
Lighted tower 3260' from DER, 348' right of centerline, 105' AGL/122' MSL.
Trees beginning 1273' from DER, 158' left of centerline, up to 76' AGL/86' MSL.
Antenna 627' from DER, 629' left of centerline, 78' AGL/88' MSL.

TAMPA, FL (CON'T)

TAMPA INTL (TPA)

TAKEOFF MINIMUMS AND (OBSTACLE) DEPARTURE PROCEDURES

AMDT 10 30APR15 (15120) (FAA)

TAKEOFF MINIMUMS:

Rwy 19L, 200-1½ or std. w/min. climb of 220' per NM to 300, or alternatively, with standard takeoff minimums and a normal 200' per NM climb gradient, takeoff must occur no later than 1500' prior to DER.

DEPARTURE PROCEDURE:

Rwy 10, climb heading 097° to 800 before turning right.

TAKEOFF OBSTACLE NOTES:

Rwy 1L, light 6' from DER, 5' left of centerline, 1' AGL/22' MSL.
Sign 51' from DER, 397' right of centerline, 4' AGL/23' MSL.
Trees beginning 625' from DER, 661' right of centerline, up to 57' AGL/81' MSL.
Trees beginning 1238' from DER, 436' left of centerline, up to 40' AGL/60' MSL.
Rwy 1R, trees beginning 100' from DER, 499' left of centerline, up to 37' AGL/61' MSL.
Rwy 10, sign 47' from DER, 251' right of centerline, 3' AGL/28' MSL.
Trees beginning 1325' from DER left and right of centerline, up to 74' AGL/96' MSL.
Trees beginning 3091' from DER, left and right of centerline, up to 91' AGL/116' MSL.
Rwy 19L, sign 47' from DER, 274' left of centerline, 3' AGL/19' MSL.
Multiple buildings 3237' from DER, 1150' left of centerline, up to 168' AGL/176' MSL.
Rwy 19R, sign 46' from DER, 398' left of centerline, 4' AGL/12' MSL.
Tree 488' from DER, 578' right of Centerline, 32' AGL/37' MSL.
Rwy 28, poles beginning 69' from DER, 437' left of centerline, up to 41' AGL/52' MSL.
Signs beginning 503' from DER, 403' right of centerline, up to 29' AGL/41' MSL.
Trees beginning 1008' from DER, 86' left of centerline, up to 52' AGL/61' MSL.
Poles beginning 4312' from DER, 1161' left of centerline, up to 156' AGL/157' MSL.

TITUSVILLE, FL

ARTHUR DUNN AIR PARK (X21)

TAKEOFF MINIMUMS AND (OBSTACLE) DEPARTURE PROCEDURES

AMDT 2 31JAN19 (19031) (FAA)

TAKEOFF MINIMUMS:

Rwys 4, 22 NA-Turf.
Rwy 15, 400-2¼ or std. w/min. climb of 350' per NM to 700.

TAKEOFF OBSTACLE NOTES:

Rwy 15, trees beginning 40' from DER, left and right of centerline, up to 77' AGL/111' MSL.
Towers beginning 4975' from DER, 132' right of centerline, up to 399' AGL/419' MSL.
Buildings and poles beginning 170' from DER, left and right of centerline, up to 40' AGL/71' MSL.
Rwy 33, signs, poles, and antennas beginning 7' from DER, left and right of centerline, up to 56' AGL/85' MSL.
Trees beginning 128' from DER, left and right of centerline, up to 60' AGL/89' MSL.
Vehicles beginning 414' from DER, left and right of centerline, up to 15' AGL/39' MSL.

SPACE COAST RGNL (TIX)

TAKEOFF MINIMUMS AND (OBSTACLE) DEPARTURE PROCEDURES

ORIG 28JAN99 (99028) (FAA)

TAKEOFF OBSTACLE NOTES:

Rwy 36, 60' AGL trees 254' from DER, 526' right of centerline.

SPACE FLORIDA LAUNCH AND LANDING FACILITY (TTS)

TAKEOFF MINIMUMS AND (OBSTACLE) DEPARTURE PROCEDURES

AMDT 1 29JUL10 (22195) (FAA)

DEPARTURE PROCEDURE:

Rwy 15, climb heading 155° to 700 before turning eastbound.

TAKEOFF OBSTACLE NOTES:

Rwy 15, trees beginning 2177' from DER, across centerline, up to 100' AGL/104' MSL.
Rwy 33, trees beginning 445' from DER, 482' right of centerline, up to 100' AGL/106' MSL.
Trees beginning 1275' from DER, 80' left of centerline, up to 100' AGL/106' MSL.

TYNDALL AFB (KPAM)

PANAMA CITY, FL

TAKEOFF MINIMUMS AND (OBSTACLE) DEPARTURE PROCEDURES

AMDT 1 24FEB22 (22055) (USAF)

TAKEOFF OBSTACLE NOTES:

Rwy 14L, vehicle 124' from DER, 533' right of centerline, 10' AGL/25' MSL.
Terrain 0' from DER, 500' right of centerline, 15' MSL.
Rwy 14R, acft tail 37' from DER, 200' right of centerline, 20' AGL/34' MSL.
Acft tail 38' from DER, 245' left of centerline, 20' AGL/34' MSL.
Terrain 11' from DER, 502' right of centerline, 18' MSL.
Rwy 32L, bldg 188' from DER, 519' left of centerline, 11' AGL/26' MSL.

22 FEB 2024 to 21 MAR 2024
22 FEB 2024 to 21 MAR 2024

UMATILLA, FL

UMATILLA MUNI (X23)

TAKEOFF MINIMUMS AND (OBSTACLE) DEPARTURE PROCEDURES

AMDT 1 05OCT23 (23278) (FAA)

TAKEOFF OBSTACLE NOTES:

Rwy 1, trees beginning 19' from DER, 211' left of centerline, up to 57' AGL/156' MSL.
Terrain 37' from DER, 267' right of centerline, 112' MSL.
Trees, terrain beginning 41' from DER, 190' right of centerline, up to 57' AGL/166' MSL.
Trees beginning 66' from DER, 47' left of centerline, up to 66' AGL/164' MSL.
Trees, building beginning 198' from DER, 128' right of centerline, up to 60' AGL/171' MSL.
Trees beginning 422' from DER, 182' right of centerline, up to 174' MSL.
Trees beginning 441' from DER, 171' right of centerline, up to 176' MSL.
Tree 1471' from DER, 861' right of centerline, 188' MSL.
Tree 1874' from DER, 238' right of centerline, 192' MSL.
Tree 1905' from DER, 33' right of centerline, 195' MSL.
Tree 1911' from DER, 343' right of centerline, 197' MSL.
Trees beginning 1927' from DER, 20' right of centerline, up to 200' MSL.
Tree, pole beginning 1927' from DER, 15' left of centerline, up to 193' MSL.
Tree 1941' from DER, 164' right of centerline, 201' MSL.
Tree 2046' from DER, 136' right of centerline, 204' MSL.
Trees beginning 2065' from DER, 83' right of centerline, up to 206' MSL.
Trees beginning 2088' from DER, 90' right of centerline, up to 208' MSL.
Trees beginning 2119' from DER, 30' right of centerline, up to 209' MSL.
Trees beginning 2141' from DER, 131' right of centerline, up to 212' MSL.
Trees beginning 2157' from DER, 29' right of centerline, up to 215' MSL.
Trees, poles beginning 2186' from DER, 128' right of centerline, up to 66' AGL/217' MSL.
Tree 2341' from DER, 7' left of centerline, 55' AGL/203' MSL.
Trees beginning 2423' from DER, 84' right of centerline, up to 67' AGL/224' MSL.
Rwy 19, tree, vehicle on road, building beginning 9' from DER, 211' right of centerline, up to 132' MSL.
Tree 40' from DER, 372' right of centerline, 133' MSL.
Trees, vehicle on road beginning 54' from DER, 294' right of centerline, up to 135' MSL.
Tree 78' from DER, 235' left of centerline, 130' MSL.
Trees beginning 110' from DER, 232' left of centerline, up to 135' MSL.
Trees, vehicle on road beginning 147' from DER, 197' left of centerline, up to 63' AGL/150' MSL.
Trees, vehicle on road, pole beginning 163' from DER, 11' right of centerline, up to 65' AGL/164' MSL.
Trees, vehicle on road beginning 217' from DER, 8' left of centerline, up to 63' AGL/155' MSL.
Trees beginning 855' from DER, 237' left of centerline, up to 160' MSL.
Trees beginning 1073' from DER, 168' left of centerline, up to 163' MSL.
Trees beginning 1176' from DER, 166' left of centerline, up to 164' MSL.
Trees, poles beginning 1241' from DER, 172' left of centerline, up to 83' AGL/169' MSL.
Tree 1847' from DER, 223' right of centerline, 100' AGL/169' MSL.

VENICE, FL

VENICE MUNI (VNC)

TAKEOFF MINIMUMS AND (OBSTACLE) DEPARTURE PROCEDURES

AMDT 4 17JUN21 (21168) (FAA)

TAKEOFF MINIMUMS:

Rwy 5, std. w/min. climb of 220' per NM to 800, or 1000-3 for VCOA.

DEPARTURE PROCEDURE:

Rwy 31, climb on heading 305° to 1500 before proceeding on course.

VCOA:

Rwy 5, obtain ATC approval for VCOA when requesting IFR clearance. Climb in visual conditions to cross Venice Muni airport at or above 800 before proceeding on course.

TAKEOFF OBSTACLE NOTES:

Rwy 5, vegetation 4' from DER, 307' right of centerline, 27' MSL.
Sign 49' from DER, 162' left of centerline, 2' AGL/19' MSL.
Tree 292' from DER, 400' left of centerline, 34' MSL.
Tree 347' from DER, 537' left of centerline, 42' MSL.
Tree 391' from DER, 557' left of centerline, 47' MSL.
Trees, pole, building beginning 454' from DER, 334' left of centerline, up to 48' MSL.
Tree 457' from DER, 610' right of centerline, 40' MSL.
Pole 471' from DER, 538' right of centerline, 48' MSL.
Trees beginning 590' from DER, 430' right of centerline, up to 52' MSL.
Trees, poles beginning 668' from DER, 14' right of centerline, up to 62' MSL.
Trees, pole beginning 1043' from DER, 317' left of centerline, up to 51' MSL.
Trees, poles beginning 1054' from DER, 73' left of centerline, up to 56' MSL.
Building, pole, trees beginning 1355' from DER, 323' right of centerline, up to 66' MSL.
Trees beginning 1647' from DER, 885' left of centerline, up to 72' MSL.
Rwy 13, tree, fence beginning 2' from DER, 245' left of centerline, up to 33' MSL.
Tree 6' from DER, 282' right of centerline, 36' MSL.
Tree, fence beginning 18' from DER, 283' right of centerline, up to 37' MSL.
Trees beginning 39' from DER, 227' left of centerline, up to 38' MSL.
Trees beginning 85' from DER, 283' right of centerline, up to 64' MSL.
Tree 139' from DER, 468' left of centerline, 47' MSL.

CON'T

22 FEB 2024 to 21 MAR 2024
22 FEB 2024 to 21 MAR 2024

VENICE, FL (CON'T)

VENICE MUNI (VNC) (CON'T)

Rwy 13 (CON'T), trees beginning 146' from DER, 22' right of centerline, up to 80' AGL/94' MSL.
Trees beginning 151' from DER, 436' left of centerline, up to 63' MSL.
Trees beginning 234' from DER, 377' left of centerline, up to 69' MSL.
Tree, 2129' from DER, 609' left of centerline, 74' MSL.
Tree 2160' from DER, 170' left of centerline, 61' AGL/78' MSL.
Trees beginning 2278' from DER, 401' right of centerline, up to 98' MSL.
Tree 2404' from DER, 539' left of centerline, 87' MSL.
Tree 2910' from DER, 594' right of centerline, 99' MSL.
Rwy 23, tree 9' from DER, 277' left of centerline, 27' MSL.
Tree 22' from DER, 331' right of centerline, 35' MSL.
Tree 42' from DER, 385' left of centerline, 34' MSL.
Trees beginning 89' from DER, 317' right of centerline, up to 38' MSL.
Trees, pole beginning 104' from DER, 215' left of centerline, up to 39' MSL.
Trees beginning 132' from DER, 196' right of centerline, up to 39' MSL.
Tree 926' from DER, 330' left of centerline, 47' MSL.
Rwy 31, tree 0' from DER, 348' left of centerline, 36' MSL.
Trees, fence beginning 6' from DER, 282' left of centerline, up to 50' MSL.
Tree 345' from DER, 515' left of centerline, 53' MSL.
Trees, pole beginning 383' from DER, 351' left of centerline, up to 57' MSL.
Trees beginning 608' from DER, 640' right of centerline, up to 36' MSL.
Trees beginning 702' from DER, 385' left of centerline, up to 64' MSL.
Trees, poles, antennas, tower beginning 745' from DER, 80' left of centerline, up to 73' MSL.
Pole 804' from DER, 561' right of centerline, 28' AGL/42' MSL.
Trees, poles beginning 830' from DER, 427' right of centerline, up to 61' MSL.
Tree 1084' from DER, 548' right of centerline, 67' MSL.
Trees beginning 1089' from DER, 424' right of centerline, up to 74' MSL.
Trees beginning 1133' from DER, 88' right of centerline, up to 78' MSL.
Trees beginning 1699' from DER, 346' right of centerline, up to 80' MSL.
Tree 1752' from DER, 646' left of centerline, 74' MSL.
Trees beginning 1773' from DER, 434' left of centerline, up to 75' MSL.
Tree 2164' from DER, 560' left of centerline, 68' AGL/78' MSL.
Tree 2487' from DER, 81' left of centerline, 75' AGL/86' MSL.
Trees beginning 2495' from DER, 33' left of centerline, up to 88' AGL/99' MSL.
Trees beginning 2539' from DER, 14' left of centerline, up to 89' AGL/100' MSL.
Trees beginning 2754' from DER, 129' left of centerline, up to 107' MSL.

VERO BEACH, FL

VERO BEACH RGNL (VRB)

TAKEOFF MINIMUMS AND (OBSTACLE) DEPARTURE PROCEDURES

ORIG-B 17AUG17 (17229) (FAA)

TAKEOFF OBSTACLE NOTES:

Rwy 4, multiple trees beginning 813' from DER, 178' left of centerline, up to 100' AGL/120' MSL.
Multiple trees beginning 3003' from DER, 93' right of centerline, up to 83' AGL/100' MSL.
Rwy 12L, multiple trees beginning 171' from DER, 455' right of centerline, up to 57' AGL/74' MSL.
Multiple trees and lights beginning 547' from DER, 259' left of centerline, up to 39' AGL/56' MSL.
Storage tank 1813' from DER, 763' right of centerline, 45' AGL/74' MSL.
Rwy 12R, pole 709' from DER, 522' left of centerline, 28' AGL/45' MSL.
Spire 1622' from DER, 574' right of centerline, 44' AGL/61' MSL.
Rwy 22, vehicles on road abeam DER, 421' left of centerline, up to 15' AGL/39' MSL.
Vehicles on road 408' from DER, left and right of centerline, up to 15' AGL/39' MSL.
Multiple trees beginning 1404' from DER, 272' left of centerline, up to 64' AGL/84' MSL.
Multiple trees beginning 1989' from DER, 126' right of centerline, up to 68' AGL/88' MSL.
Rwy 30L, multiple trees beginning 1206' from DER, 46' right of centerline, up to 100' AGL/120' MSL.
Multiple trees beginning 1575' from DER, 135' left of centerline, up to 61' AGL/81' MSL.
Rwy 30R, multiple antennas and trees beginning 1656' from DER, 111' right of centerline, up to 70' AGL/90' MSL.
Multiple trees beginning 1782' from DER, 247' left of centerline, up to 65' AGL/85' MSL.

WAUCHULA, FL

WAUCHULA MUNI (CHN)

TAKEOFF MINIMUMS AND (OBSTACLE) DEPARTURE PROCEDURES

AMDT 1 18JAN07 (07018) (FAA)

TAKEOFF OBSTACLE NOTES:

Rwy 18, trees 450' from DER, 130' left of centerline, 22' AGL/126' MSL.
Rwy 36, tree 183' from DER, 350' left of centerline, 49' AGL/145' MSL.
Power line 582' from DER, on centerline, 51' AGL/140' MSL.
Tree, 323' from DER, 490' left of centerline, 100' AGL/200' MSL.
Tree 39' from DER, 486' right of centerline, 100' AGL/185' MSL.

WEST PALM BEACH, FL

NORTH PALM BEACH COUNTY GENERAL AVIATION (F45)

TAKEOFF MINIMUMS AND (OBSTACLE) DEPARTURE PROCEDURES

AMDT 1 01FEB18 (18032) (FAA)

TAKEOFF MINIMUMS:

Rwys 9L, 27R NA-turf runway.

TAKEOFF OBSTACLE NOTES:

Rwy 9R, traverse way beginning 14' from DER, 308' left of centerline, up to 35' MSL.
Vegetation 54' from DER, 438' right of centerline, 24' MSL.
Tree 462' from DER, 591' left of centerline, 46' MSL.
Tree 582' from DER, 420' right of centerline, 40' MSL.
Trees beginning 734' from DER, 57' left of centerline, up to 57' MSL.
Tree 810' from DER, 419' right of centerline, 43' MSL.
Tree 926' from DER, 396' right of centerline, 48' MSL.
Trees beginning 944' from DER, 47' right of centerline, up to 55' MSL.
Trees beginning 1060' from DER, 203' right of centerline, up to 68' MSL.
Tree 1082' from DER, 277' left of centerline, 63' MSL.
Trees beginning 1128' from DER, 125' left of centerline, up to 70' MSL.
Tree 1619' from DER, 764' left of centerline, 79' MSL.
Tree 1767' from DER, 628' right of centerline, 70' MSL.
Trees beginning 1784' from DER, 358' right of centerline, up to 72' MSL.
Tree 1969' from DER, 870' right of centerline, 77' MSL.
Tree 2011' from DER, 391' right of centerline, 80' MSL.
Tree, pole beginning 2264' from DER, 442' left of centerline, up to 88' MSL.
Trees beginning 2488' from DER, 55' left of centerline, up to 95' MSL.
Rwy 14, trees beginning 0' from DER, 405' right of centerline, up to 53' MSL.
Trees beginning 89' from DER, 14' right of centerline, up to 54' MSL.
Tree 144' from DER, 266' left of centerline, 26' MSL.
Trees beginning 553' from DER, 257' left of centerline, up to 39' MSL.
Tree 607' from DER, 31' left of centerline, 40' MSL.
Tree 652' from DER, 672' left of centerline, 46' MSL.
Trees beginning 735' from DER, 30' left of centerline, up to 48' MSL.
Tree 1124' from DER, 285' left of centerline, 54' MSL.
Trees beginning 1157' from DER, 124' left of centerline, up to 60' MSL.
Trees beginning 1185' from DER, 4' right of centerline, up to 63' MSL.
Trees beginning 1299' from DER, 323' left of centerline, up to 68' MSL.
Tree 1656' from DER, 704' left of centerline, 75' MSL.
Tree 1758' from DER, 726' left of centerline, 91' MSL.
Rwy 27L, NAVAID 10' from DER, 99' left of centerline, 4' AGL/22' MSL.
Tree 43' from DER, 419' left of centerline, 23' MSL.
Traverse way 76' from DER, 438' right of centerline, 34' MSL.
Tree 985' from DER, 711' right of centerline, 49' MSL.
Tree 1448' from DER, 825' right of centerline, 59' MSL.
Tree 1454' from DER, 888' left of centerline, 65' MSL.
Trees beginning 1586' from DER, 874' left of centerline, up to 70' MSL.
Tree 2040' from DER, 906' left of centerline, 75' MSL.
Rwy 32, tree 91' from DER, 414' right of centerline, 57' MSL.
Trees beginning 103' from DER, 26' right of centerline, up to 67' MSL.
Trees beginning 807' from DER, 91' left of centerline, up to 59' MSL.
Trees beginning 1818' from DER, 121' left of centerline, up to 72' MSL.
Trees beginning 1820' from DER, 0' of centerline, up to 79' MSL.

PALM BEACH COUNTY PARK (LNA)

TAKEOFF MINIMUMS AND (OBSTACLE) DEPARTURE PROCEDURES

AMDT 3 01FEB18 (18032) (FAA)

TAKEOFF MINIMUMS:

Rwys 10, 28, NA - noise abatement.

DEPARTURE PROCEDURE:

Rwy 22, climb heading 219° to 1100 before turning right.
Rwy 34, climb heading 339° to 700 before turning left.

TAKEOFF OBSTACLE NOTES:

Rwy 4, tree 39' from DER, 227' right of centerline, 23' MSL.
Tree 75' from DER, 223' right of centerline, 29' MSL.
Trees beginning 78' from DER, 46' right of centerline, up to 44' MSL.
Tree 519' from DER, 573' left of centerline, 39' MSL.
Trees beginning 667' from DER, 38' left of centerline, up to 46' MSL.
Trees beginning 925' from DER, 106' left of centerline, up to 58' MSL.
Trees beginning 1260' from DER, 337' left of centerline, up to 59' MSL.
Pole 1284' from DER, 794' right of centerline, 42' AGL/49' MSL.
Tree 1376' from DER, 494' left of centerline, 71' MSL.
Tree 1639' from DER, 143' right of centerline, 57' MSL.
Tree 1732' from DER, 535' left of centerline, 87' MSL.
Tree 1804' from DER, 230' right of centerline, 64' MSL.
Tree 3083' from DER, 430' right of centerline, 100' MSL.

CON'T

22 FEB 2024 to 21 MAR 2024
22 FEB 2024 to 21 MAR 2024

WEST PALM BEACH, FL (CON'T)

PALM BEACH COUNTY PARK (LNA) (CON'T)

Rwy 4 (CON'T), tree 3214' from DER, 294' right of centerline, 102' MSL.
Rwy 16, buildings beginning 14' from DER, 233' right of centerline, up to 25' AGL/37' MSL.
Trees beginning 19' from DER, 353' left of centerline, up to 20' MSL.
Building, trees, pole beginning 111' from DER, 316' right of centerline, up to 34' AGL/45' MSL.
Trees beginning 158' from DER, 127' left of centerline, up to 21' MSL.
Poles beginning 678' from DER, 335' right of centerline, up to 35' AGL/47' MSL.
Poles, tree, building beginning 759' from DER, 56' right of centerline, up to 37' AGL/50' MSL.
Pole 957' from DER, 93' left of centerline, 26' AGL/40' MSL.
Pole 1079' from DER, 115' left of centerline, 27' AGL/42' MSL.
Poles beginning 1112' from DER, 337' left of centerline, up to 31' AGL/46' MSL.
Tree 1785' from DER, 388' left of centerline, 77' MSL.
Tree 1860' from DER, 186' right of centerline, 60' MSL.
Trees beginning 1891' from DER, 82' left of centerline, up to 91' MSL.
Rwy 22, tree 411' from DER, 607' left of centerline, 52' MSL.
Poles, vehicle on road, transmission lines, tree beginning 425' from DER, 103' left of centerline, up to 47' AGL/57' MSL.
Tree 805' from DER, 46' right of centerline, 33' MSL.
Tree 866' from DER, 138' right of centerline, 36' MSL.
Poles, trees beginning 955' from DER, 5' right of centerline, up to 32' AGL/46' MSL.
Transmission line, trees beginning 1058' from DER, 9' left of centerline, up to 48' AGL/59' MSL.
Pole 1262' from DER, 777' right of centerline, 47' AGL/61' MSL.
Poles, tree beginning 1292' from DER, 26' right of centerline, up to 51' AGL/65' MSL.
Tree 1648' from DER, 514' right of centerline, 97' MSL.
Tower 1711' from DER, 689' left of centerline, 55' AGL/69' MSL.
Tree 2926' from DER, 53' right of centerline, 102' MSL.
Tree 2980' from DER, 148' left of centerline, 88' MSL.
Tree 3050' from DER, 9' left of centerline, 107' MSL.
Rwy 34, tree 23' from DER, 400' right of centerline, 21' MSL.
Trees beginning 37' from DER, 341' left of centerline, up to 26' MSL.
Trees beginning 359' from DER, 355' right of centerline, up to 39' MSL.
Tree 384' from DER, 390' left of centerline, 28' MSL.
Tree 390' from DER, 523' left of centerline, 40' MSL.
Trees, building beginning 470' from DER, 243' right of centerline, up to 45' MSL.
Trees beginning 486' from DER, 55' left of centerline, up to 43' MSL.
Trees beginning 673' from DER, 352' left of centerline, up to 46' MSL.
Trees beginning 758' from DER, 183' left of centerline, up to 49' MSL.
Tree 788' from DER, 485' right of centerline, 52' MSL.
Trees beginning 796' from DER, 298' right of centerline, up to 57' MSL.
Trees, pole beginning 888' from DER, 87' left of centerline, up to 51' MSL.
Tree 1013' from DER, 133' left of centerline, 53' MSL.
Trees beginning 1100' from DER, 67' left of centerline, up to 58' MSL.
Tree, poles beginning 1133' from DER, 204' right of centerline, up to 59' MSL.
Trees beginning 1412' from DER, 32' left of centerline, up to 69' MSL.

PALM BEACH INTL (PBI)

TAKEOFF MINIMUMS AND (OBSTACLE) DEPARTURE PROCEDURES
AMDT 3 17DEC09 (09351) (FAA)

DEPARTURE PROCEDURE:
Rwy 28L, climb heading 279° to 1200 before turning left.
Rwy 28R, climb heading 279° to 1200 before turning left.

TAKEOFF OBSTACLE NOTES:
Rwy 10R, antenna on hanger 177' from DER, 450' right of centerline, 38' AGL/57' MSL.
Rwy 10L, light pole 1461' from DER, 843' right of centerline, 45' AGL/64' MSL.
Rwy 14, transmission line tower, traffic signal, poles, and trees beginning 649' from DER, 24' left of centerline, up to 71' AGL/90' MSL.
Vehicles on road, light poles, and trees beginning 168' from DER, 76' right of centerline, up to 87' AGL/106' MSL.
Rwy 28R, light pole and trees beginning 1205' from DER, 323' left of centerline, up to 63' AGL/82' MSL.
Sign, light pole, and trees beginning 1233' from DER, 155' right of centerline, up to 44' AGL/63' MSL.
Rwy 32, trees beginning 1993' from DER, 444' left of centerline, up to 69' AGL/88' MSL.
Trees beginning 1108' from DER, 548' right of centerline, up to 70' AGL/89' MSL.

22 FEB 2024 to 21 MAR 2024
22 FEB 2024 to 21 MAR 2024

WHITING FLD NAS-NORTH (KNSE)

MILTON, FL

TAKEOFF MINIMUMS AND (OBSTACLE) DEPARTURE PROCEDURES

AMDT 1 28DEC23 (23362) (USN)

TAKEOFF OBSTACLE NOTES:

Rwy 5, trees 1816' from DER, 386' right of centerline, 230' MSL.
Rwy 14, terrain 0' from DER, 484' right of centerline, 167' MSL.
Terrain 254' from DER, 568' right of centerline, 167' MSL.
Trees 2373' from DER, 691' right of centerline, 241' MSL.
Trees 2427' from DER, 558' right of centerline, 222' MSL.
Trees 2431' from DER, 781' right of centerline, 246' MSL.
Rwy 23, terrain 0' from DER, 172' left of centerline, 171' MSL.
Terrain 0' from DER, 287' right of centerline, 170' MSL.

WHITING FLD NAS-SOUTH (KNDZ)

MILTON, FL

TAKEOFF MINIMUMS AND (OBSTACLE) DEPARTURE PROCEDURES

28DEC23 (23362) (USN)

TAKEOFF OBSTACLE NOTES:

Rwy 5, terrain 0' from DER, 500' left of centerline, 178' MSL.
Trees 973' from DER, 686' right of centerline, 200' MSL.
Rwy 14, terrain 0' from DER, 500' left of centerline, 171' MSL.
Terrain 81' from DER, 500' left of centerline, 171' MSL.
Terrain 173' from DER, 546' left of centerline, 171' MSL.
Rwy 23, trees 841' from DER, 370' left of centerline, 192' MSL.
Rwy 32, terrain 0' from DER, 500' right of centerline, 192' MSL.
Trees 546' from DER, 429' right of centerline, 217' MSL.
Twr 606' from DER, 457' right of centerline, 213' MSL.
Trees 752' from DER, 621' right of centerline, 221' MSL.
Trees 1229' from DER, 512' right of centerline, 212' MSL.
Trees 1336' from DER, 564' left of centerline, 206' MSL.
Trees 1576' from DER, 535' right of centerline, 230' MSL.
Trees 1618' from DER, 295' left of centerline, 224' MSL.
Trees 2125' from DER, 73' right of centerline, 242' MSL.
Twr 2522' from DER, 1113' right of centerline, 62' AGL/235' MSL.

WILLISTON, FL

WILLISTON MUNI (X60)

TAKEOFF MINIMUMS AND (OBSTACLE) DEPARTURE PROCEDURES

AMDT 2B 05NOV20 (20310) (FAA)

TAKEOFF MINIMUMS:

Rwy 5, 400-2½ or std. w/min. climb of 257' per NM to 600.
Rwy 14, 300-2 or std. w/min. climb of 205' per NM to 500.
Rwys 18, 36, NA - Environmental.

DEPARTURE PROCEDURE:

Rwy 5, climb heading 049° to 500 before proceeding on course.
Rwy 14, climb heading 142° to 600 before proceeding on course.
Rwy 23, climb on a heading between 253° CW 048° from DER, or min. climb of 249' per NM to 1900 for all other courses.

TAKEOFF OBSTACLE NOTES:

Rwy 5, trees beginning 22' from DER, 355' left of centerline, up to 130' MSL.
Trees beginning 35' from DER, 300' right of centerline, up to 120' MSL.
Trees beginning 138' from DER, 355' left of centerline, up to 134' MSL.
Trees beginning 346' from DER, 238' left of centerline, up to 146' MSL.
Trees beginning 384' from DER, 285' right of centerline, up to 134' MSL.
Trees beginning 531' from DER, 187' left of centerline, up to 148' MSL.
Trees beginning 535' from DER, 46' right of centerline, up to 144' MSL.
Trees beginning 666' from DER, 54' left of centerline, up to 150' MSL.
Trees beginning 841' from DER, 8' left of centerline, up to 155' MSL.
Trees beginning1439' from DER, 93' right of centerline, up to 146' MSL.

CON'T

22 FEB 2024 to 21 MAR 2024
22 FEB 2024 to 21 MAR 2024

WILLISTON, FL (CON'T)

WILLISTON MUNI (X60) (CON'T)

Rwy 5 (CON'T), trees beginning 1570' from DER, 16' left of centerline, up to 158' MSL.
Trees beginning 1673' from DER, 7' right of centerline, up to 152' MSL.
Trees beginning 2641' from DER, 822' left of centerline, up to 166' MSL.
Trees beginning 2831' from DER, 896' left of centerline, up to 171' MSL.
Antenna 1.9 NM from DER, 2380' left of centerline, 300' AGL/376' MSL.
Tower 1.9 NM from DER, 2346' left of centerline, 324' AGL/448' MSL.
Rwy 14, trees beginning 52' from DER, 448' right of centerline, up to 95' MSL.
Tree 58' from DER, 428' left of centerline, 98' MSL.
Trees beginning 58' from DER, 283' left of centerline, up to 102' MSL.
Tree 632' from DER, 636' left of centerline, 103' MSL.
Trees beginning 730' from DER, 468' left of centerline, up to 125' MSL.
Trees beginning 896' from DER, 490' left of centerline, up to 129' MSL.
Trees beginning 1102' from DER, 221' right of centerline, up to 131' MSL.
Trees beginning 1244' from DER, 344' left of centerline, up to 133' MSL.
Trees beginning 1613' from DER, 258' left of centerline, up to 137' MSL.
Tree 1689' from DER, 730' left of centerline, 138' MSL.
Tree 1703' from DER, 657' left of centerline, 140' MSL.
Trees beginning 1706' from DER, 42' left of centerline, up to 142' MSL.
Tower 1.7 NM from DER, 1090' right of centerline, 260' AGL/326' MSL.
Rwy 23, vegetation 99' from DER, 169' left of centerline, 78' MSL.
Vegetation 489' from DER, 562' right of centerline, 86' MSL.
Tree 535' from DER, 355' left of centerline, 111' MSL.
Trees beginning 551' from DER, 227' left of centerline, up to 112' MSL.
Trees beginning 565' from DER, 239' right of centerline, up to 98' MSL.
Tree 739' from DER, 334' right of centerline, 101' MSL.
Tree 753' from DER, 569' right of centerline, 109' MSL.
Trees beginning 760' from DER, 535' left of centerline, up to 134' MSL.
Trees beginning 788' from DER, 300' left of centerline, up to 139' MSL.
Tree 803' from DER, 471' right of centerline, 116' MSL.
Trees beginning 805' from DER, 264' right of centerline, up to 121' MSL.
Trees beginning 839' from DER, 305' right of centerline, up to 123' MSL.
Trees beginning 952' from DER, 297' right of centerline, up to 126' MSL.
Trees beginning 1020' from DER, 416' right of centerline, up to 135' MSL.
Trees beginning 1086' from DER, 169' right of centerline, up to 139' MSL.
Trees beginning 1300' from DER, 48' right of centerline, up to 142' MSL.
Trees beginning 1329' from DER, 19' left of centerline, up to 145' MSL.
Trees beginning 1433' from DER, 243' right of centerline, up to 143' MSL.
Trees beginning 1503' from DER, 429' right of centerline, up to 147' MSL.
Trees beginning 1601' from DER, 20' right of centerline, up to 149' MSL.
Tree 2453' from DER, 1135' right of centerline, 151' MSL.
Trees beginning 2456' from DER, 73' right of centerline, up to 160' MSL.
Trees beginning 2527' from DER, 418' right of centerline, up to 178' MSL.
Rwy 32, vegetation 23' from DER, 314' left of centerline, 87' MSL.
Vegetation 43' from DER, 486' left of centerline, 88' MSL.
Vegetation, tree beginning 55' from DER, 247' left of centerline, up to 100' MSL.
Vegetation 63' from DER, 375' right of centerline, 72' MSL.
Tree 214' from DER, 550' right of centerline, 85' MSL.
Trees beginning 424' from DER, 381' right of centerline, up to 97' MSL.
Trees beginning 586' from DER, 462' right of centerline, up to 144' MSL.
Trees beginning 762' from DER, 441' right of centerline, up to 155' MSL.
Tree 883' from DER, 530' right of centerline, 161' MSL.
Trees beginning 892' from DER, 10' right of centerline, up to 169' MSL.
Trees beginning 1165' from DER, 741' left of centerline, up to 137' MSL.
Tree 1357' from DER, 589' left of centerline,139' MSL.
Trees beginning 1438' from DER, 338' left of centerline, up to 162' MSL.
Tree 1674' from DER, 781' left of centerline, 170' MSL.
Trees beginning 1680' from DER, 13' left of centerline, up to 172' MSL.

22 FEB 2024 to 21 MAR 2024
22 FEB 2024 to 21 MAR 2024

WINTER HAVEN, FL

WINTER HAVEN RGNL (GIF)
TAKEOFF MINIMUMS AND (OBSTACLE) DEPARTURE PROCEDURES
AMDT 1A 28FEB19 (19059) (FAA)

TAKEOFF MINIMUMS:
Rwy 23, 300-1¼ or std. w/min. climb of 325' per NM to 500.
Rwy 29, 400-2½ or std. w/min. climb of 250' per NM to 700.

TAKEOFF OBSTACLE NOTES:
Rwy 5, tree, vehicle on traverse way beginning 55' from DER, 340' left of centerline, up to 175' MSL.
Tree 207' from DER, 465' right of centerline, 155' MSL.
Trees beginning 300' from DER, 75' left of centerline, up to 196' MSL.
Trees beginning 2091' from DER, 451' left of centerline, up to 200' MSL.
Rwy 11, trees beginning 73' from DER, 361' left of centerline, up to 184' MSL.
Vehicle on traverse way 215' from DER, 277' right of centerline, 155' MSL.
Trees beginning 278' from DER, 330' left of centerline, up to 186' MSL.
Tree 445' from DER, 406' right of centerline, 187' MSL.
Tree 459' from DER, 489' right of centerline, 195' MSL.
Trees beginning 461' from DER, 506' left of centerline, up to 187' MSL.
Trees beginning 545' from DER, 363' right of centerline, up to 203' MSL.
Rwy 23, tree 176' from DER, 372' left of centerline, 177' MSL.
Tree 409' from DER, 358' left of centerline, 182' MSL.
Trees beginning 978' from DER, 335' left of centerline, up to 220' MSL.
Trees beginning 1153' from DER, 563' left of centerline, up to 221' MSL.
Tank 1 NM from DER, 972' left of centerline, 176' AGL/328' MSL.
Tower 1.2 NM from DER, 1316' right of centerline, 199' AGL/353' MSL.
Rwy 29, building 20' from DER, 500' left of centerline, 20' AGL/158' MSL.
Trees beginning 75' from DER, 282' left of centerline, up to 187' MSL.
Tree 182' from DER, 284' right of centerline, 181' MSL.
Tree, pole beginning 217' from DER, 307' right of centerline, up to 184' MSL.
Tower 1.9 NM from DER, 2510' left of centerline, 310' AGL/457' MSL.

ZEPHYRHILLS, FL

ZEPHYRHILLS MUNI (ZPH)
TAKEOFF MINIMUMS AND (OBSTACLE) DEPARTURE PROCEDURES
AMDT 2 18SEP14 (14261) (FAA)

TAKEOFF OBSTACLE NOTES:
Rwy 1, trees beginning 836' from DER, 160' right of centerline, up to 77' AGL/157' MSL.
Trees beginning 374' from DER, 586' left of centerline, up to 55' AGL/136' MSL.
Trees beginning 1332' from DER, 7' left of centerline, up to 87' AGL/167' MSL.
Rwy 5, trees beginning 1087' from DER, 101' left of centerline, up to 65' AGL/141' MSL.
Trees beginning 455' from DER, 432' right of centerline, up to 53' AGL/125' MSL.
Trees beginning 1030' from DER, 19' right of centerline, up to 77' AGL/151' MSL.
Rwy 19, fence 77' from DER, 464' left of centerline, 6' AGL/90' MSL.
Trees beginning 196' from DER, 339' left of centerline, up to 74' AGL/158' MSL.
Trees beginning 1345' from DER, 188' left of centerline, up to 89' AGL/168' MSL.
Tree 35' from DER, 423' right of centerline, 44' AGL/129' MSL.
Trees beginning 266' from DER, 127' right of centerline, up to 72' AGL/151' MSL.
Rwy 23, trees and poles beginning 1069' from DER, 75' left of centerline, up to 52' AGL/142' MSL.
Trees beginning 478' from DER, 23' right of centerline, up to 78' AGL/168' MSL.